ISABELLA COUNTY ZONING ORDINANCE

EFFECTIVE DATE OF ORDINANCE: FEBRUARY 15, 1989
REFORMATTED *(07-10 Eff. January 28, 2008)*
THIS DOCUMENT CONTAINS ALL AMENDMENTS TO ORDINANCE THROUGH 2016

ISABELLA COUNTY ZONING ORDINANCE

PREPARED THROUGH THE EFFORTS OF THE FOLLOWING PERSONS:

The Isabella County Planning Commission

Katharine Lindfors, Chairwoman
Bruce Pape, Vice-Chairman
Francis Engler
Wayne Husted
James Fabiano
Pamela Myler
Howard Quackenbush
Norman Rowan
Richard Sherbarth

Isabella County Department of Resources Management

Bruce E. Rohrer, Department Head
Caroline Ramsey, Administrative Aide
James Lyon, Zoning Official
Colleen Corrigan, Planning Intern
Marsha Layman, Planning Intern

The Consulting Firm of:

Progressive Architects, Engineers, and Planners
Grand Rapids, Michigan

Special Thanks to:
Eva Campbell, Former Zoning Board of Appeals Member
Thomas Courser, Zoning Board of Appeals Member
Pamela Webb-Driscoll, Former Planning Commission Member
Bernard Flint, Former Planning Commission Member
Thomas Hall, Zoning Board of Appeals Member
Evelyn Kent, Former Planning Commission Member
Richard Koester, Isabella County Agriculturalist
Robert Massey, Soil Conservation Service
Jerry McFarlane, Zoning Board of Appeals Member
Edward Schafer, Former Zoning Board of Appeals Member
Lyle Thompson, Former County Agricultural Extension Agent
Robert Wilson, Former County Zoning & Building Inspector
Joe Worgess, Zoning Board of Appeals Member

ORDINANCE ADOPTED ON DECEMBER 20, 1988 BY:
The Isabella County Board of Commissioners

Steve Rudoni, Chairman
Thomas McCann, Vice-Chairman
James McBride
Thomas Gross
Don Lackie
Richard Curtiss
Mark Pelletier

EFFECTIVE DATE OF ORDINANCE: FEBRUARY 15, 1989
REFORMATTED *(07-10 Eff. January 28, 2008)*
DOCUMENT CONTAINS ALL AMENDMENTS TO ORDINANCE THROUGH 2016

TABLE OF CONTENTS

ARTICLE 1 ..... **1**
TITLE AND PURPOSE **1**
SECTION 1.01 SHORT TITLE 1
SECTION 1.02 PURPOSE 1
SECTION 1.03 INTERPRETATION 1
SECTION 1.04 SCOPE 1
SECTION 1.05 ZONING AFFECTS ALL STRUCTURES AND LAND AND THE USE THEREOF 2

ARTICLE 2 ..... **3**
DEFINITIONS **3**
SECTION 2.01 DEFINITIONS “A” 3
SECTION 2.02 DEFINITIONS “B” 4
SECTION 2.03 DEFINITIONS “C” 6
SECTION 2.04 DEFINITIONS “D” 8
SECTION 2.05 DEFINITIONS “E” 9
SECTION 2.06 DEFINITIONS “F” 10
SECTION 2.07 DEFINITIONS “G” 11
SECTION 2.08 DEFINITIONS “H” 12
SECTION 2.09 DEFINITIONS “I” 12
SECTION 2.10 DEFINITIONS “J” 12
SECTION 2.11 DEFINITIONS “K” 12
SECTION 2.12 DEFINITIONS “L” 12
SECTION 2.13 DEFINITIONS “M” 13
SECTION 2.14 DEFINITIONS “N” 15
SECTION 2.15 DEFINITIONS “O” 15
SECTION 2.16 DEFINITIONS “P” 15
SECTION 2.17 DEFINITIONS “Q” 17
SECTION 2.18 DEFINITIONS “R” 17
SECTION 2.19 DEFINITIONS “S” 18
SECTION 2.20 DEFINITIONS “T” 22
SECTION 2.21 DEFINITIONS “U” 22
SECTION 2.22 DEFINITIONS “V” 23
SECTION 2.23 DEFINITIONS “W” 23
SECTION 2.24 DEFINITIONS “X” 24
SECTION 2.25 DEFINITIONS “Y” 24
SECTION 2.26 DEFINITIONS “Z” 24

ARTICLE 3 ..... **27**
GENERAL PROVISIONS **27**
SECTION 3.01 ACCESS 27
SECTION 3.02 ACCESSORY BUILDINGS AND STRUCTURES 27
SECTION 3.03 ANIMALS (KEEPING OF) 28
SECTION 3.04 AREA OR SPACE REQUIRED 29
SECTION 3.05 BASEMENT DWELLINGS 29
SECTION 3.06 BORROW PITS 29
SECTION 3.07 CORNER CLEARANCE 31
SECTION 3.08 CORNER LOT 31

SECTION 3.09 DAMAGED BUILDINGS 31
SECTION 3.10 DUMPSTERS 32
SECTION 3.11 DWELLING UNITS 32
SECTION 3.12 DWELLINGS ON MORE THAN ONE LOT 33
SECTION 3.13 ESSENTIAL PUBLIC SERVICES 33
SECTION 3.14 FENCES AND WALLS 34
SECTION 3.15 HEIGHT EXCEPTIONS 34
SECTION 3.16 HOME OCCUPATIONS 35
SECTION 3.17 MOVING OF STRUCTURES 36
SECTION 3.18 NON CONFORMING USES, STRUCTURES, LOTS, AND SIGNS 36
SECTION 3.19 ON SITE WIND ENERGY CONVERSION SYSTEMS (WECS) UP TO 66 FEET IN HEIGHT AND ANEMOMETER TOWERS UP TO 66 FEET IN HEIGHT ... 39
SECTION 3.20 OUTDOOR LIGHTING 41
SECTION 3.21 PRINCIPAL USE 41
SECTION 3.22 PRIVATE ROADS 41
SECTION 3.23 SCREENING PROVISIONS 47
SECTION 3.24 SOLAR PANELS, SATELLITE DISHES, ANTENNAS AND WIND GENERATORS 49
SECTION 3.25 SUBDIVISIONS OR LAND DIVISIONS 49
SECTION 3.26 SWIMMING POOLS 49
SECTION 3.27 TEMPORARY BUILDINGS AND USES 50
SECTION 3.28 VEHICLES 53
SECTION 3.29 WASTE, ACCUMULATION OF 53
SECTION 3.30 YARD OR GARAGE SALES 53
SECTION 3.31 YARD REQUIREMENT EXCEPTIONS 54

ARTICLE 4 55
DISTRICTS 55
SECTION 4.01 DISTRICTS 55
SECTION 4.02 SCOPE OF REGULATIONS 55
SECTION 4.03 PROVISION FOR OFFICIAL ZONING MAP 55
SECTION 4.04 AUTHORITY OF OFFICIAL ZONING MAP 55
SECTION 4.05 INTERPRETATION OF BOUNDARIES 55

ARTICLE 5 57
AGRICULTURAL DISTRICTS 57
SECTION 5.01 DESCRIPTION AND PURPOSE RESTRICTIVE AGRICULTURAL DISTRICT (AG-1) 57
SECTION 5.02 DESCRIPTION AND PURPOSE GENERAL AGRICULTURAL DISTRICT (AG-2) 58
SECTION 5.03 DESCRIPTION AND PURPOSE AGRICULTURAL BUFFER DISTRICT (AG-3) 58
SECTION 5.04 SPECIAL LAND USES 58
SECTION 5.05 PERMITTED USES 60
SECTION 5.06 SCHEDULE OF DISTRICT REGULATIONS 62
SECTION 5.07 SITE DEVELOPMENT STANDARDS 63
SECTION 5.08 ADDITIONAL REQUIREMENTS 63
SECTION 5.09 IMPLEMENTATION FOR SUBDIVIDING RESTRICTIVE AGRICULTURAL DISTRICT (AG-1) 63

SECTION 5.10 IMPLEMENTATION FOR SUBDIVIDING GENERAL AGRICULTURAL DISTRICT (AG-2) 64
SECTION 5.11 OFF-STREET PARKING & LOADING 64
SECTION 5.12 SIGNS 70

ARTICLE 6 75
RESIDENTIAL DISTRICTS 75
SECTION 6.01 DESCRIPTION AND PURPOSE LOW-DENSITY RESIDENTIAL DISTRICT (R-1) 75
SECTION 6.02 DESCRIPTION AND PURPOSE MEDIUM DENSITY RESIDENTIAL DISTRICT (R-2) 75
SECTION 6.03 DESCRIPTION AND PURPOSE LAKES AREA RESIDENTIAL DISTRICT (L-R) 75
SECTION 6.04 PERMITTED USES 75
SECTION 6.05 SCHEDULE OF DISTRICT REGULATIONS 77
SECTION 6.06 SITE DEVELOPMENT STANDARDS 78
SECTION 6.07 OFF-STREET PARKING AND LOADING 78
SECTION 6.08 SIGNS 84

ARTICLE 7 87
COMMERCIAL DISTRICTS 87
SECTION 7.01 DESCRIPTION AND PURPOSE GENERAL COMMERCIAL DISTRICT (C-1) 87
SECTION 7.02 DESCRIPTION AND PURPOSE RECREATION COMMERCIAL DISTRICT (C-2) 87
SECTION 7.03 PERMITTED USES 87
SECTION 7.04 SCHEDULE OF DISTRICT REGULATIONS 90
SECTION 7.05 SITE DEVELOPMENT STANDARDS 91
SECTION 7.06 ADDITIONAL REQUIREMENTS 91
SECTION 7.07 OFF-STREET PARKING & LOADING 92
SECTION 7.08 SIGNS 98

ARTICLE 8 103
(I-1) LIGHT INDUSTRIAL DISTRICT 103
SECTION 8.01 DESCRIPTION AND PURPOSE 103
SECTION 8.02 PERMITTED USES 103
SECTION 8.03 SCHEDULE OF DISTRICT REGULATIONS 106
SECTION 8.04 SITE DEVELOPMENT STANDARDS 107
SECTION 8.05 ADDITIONAL REQUIREMENTS 107
SECTION 8.06 CONDITIONAL USE REQUIREMENTS 108
SECTION 8.07 OFF-STREET PARKING AND LOADING 108
SECTION 8.08 SIGNS 114

ARTICLE 9 119
(C-I) COMMERCIAL-INDUSTRIAL PLANNED UNIT DEVELOPMENTS (PUD) DISTRICT 119
SECTION 9.01 DESCRIPTION AND PURPOSE 119
SECTION 9.02 PERMITTED USES 119
SECTION 9.03 SITE DEVELOPMENT STANDARDS 121
SECTION 9.04 PREAPPLICATION CONFERENCE 122
SECTION 9.05 FINAL APPLICATION 122

SECTION 9.06 CONDITIONS 123
SECTION 9.07 AMENDMENTS TO PLAN 123
SECTION 9.08 BOARD OF APPEALS 124
SECTION 9.09 PERFORMANCE BONDS 124
SECTION 9.10 OFF-STREET PARKING AND LOADING 124
SECTION 9.11 SIGNS 130

ARTICLE 10 135
(W-S) WATERFRONT – SHORELAND OVERLAY DISTRICT 135
SECTION 10.01 DESCRIPTION AND PURPOSE 135
SECTION 10.02 SITE DEVELOPMENT STANDARDS 136
SECTION 10.03 FUNNELING REQUIREMENTS 137

ARTICLE 11 141
SITE PLAN REVIEW 141
SECTION 11.01 PURPOSE 141
SECTION 11.02 USES REQUIRING SITE PLAN APPROVAL 141
SECTION 11.03 CHANGES IN THE APPROVED SITE PLAN 142
SECTION 11.04 SITE PLAN REQUIREMENTS 143
SECTION 11.05 REVIEW PROCEDURE 143
SECTION 11.06 STANDARDS FOR SITE PLAN REVIEW 144
SECTION 11.07 REGULATIONS 145

ARTICLE 12 147
SPECIAL LAND USES 147
SECTION 12.01 PURPOSE 147
SECTION 12.02 APPLICATION AND PROCEDURES 149
SECTION 12.03 GENERAL REQUIREMENTS FOR SPECIAL LAND USES 151
SECTION 12.04 PERFORMANCE BONDS 151
SECTION 12.05 DESIGN STANDARDS FOR SPECIAL USES 151

ARTICLE 13 179
PLANNED UNIT DEVELOPMENTS (PUD) 179
SECTION 13.01 INTENT AND PURPOSE 179
SECTION 13.02 LEGISLATIVE FINDINGS 179
SECTION 13.03 PREAPPLICATION CONFERENCE 180
SECTION 13.04 FINAL APPLICATION 180
SECTION 13.05 PERMITTED USES 182
SECTION 13.06 REQUIRED CONDITIONS FOR PUD'S 184
SECTION 13.07 PERFORMANCE BONDS 190

ARTICLE 14 191
ZONING BOARD OF APPEALS 191
SECTION 14.01 APPOINTMENT 191
SECTION 14.02 PROCEDURES OF THE BOARD OF APPEALS 191
SECTION 14.03 POWERS 192
SECTION 14.04 VARIANCE REQUESTS AND PROCEDURES 192
SECTION 14.05 DECISIONS 193
SECTION 14.06 APPEAL REQUESTS AND PROCEDURES 194

SECTION 14.07 HEARING PROCEDURES (APPEALS AND VARIANCE APPLICATIONS) 195
SECTION 14.08 PERFORMANCE BONDS 196

ARTICLE 15 197
ADMINISTRATION AND ENFORCEMENT 197
SECTION 15.01 ZONING ADMINISTRATOR 197
SECTION 15.02 ZONING PERMIT REQUIRED 197
SECTION 15.03 APPLICATION FOR ZONING PERMIT 197
SECTION 15.04 FEES 198
SECTION 15.05 TIME 199
SECTION 15.06 VIOLATIONS AND PENALTIES 200
SECTION 15.07 ADDITIONAL REMEDIES 200
SECTION 15.08 AMENDMENTS AND ADOPTION 202
SECTION 15.09 CONDITIONAL REZONING 205
SECTION 15.10 SEVERABILITY 209
SECTION 15.11 EFFECTIVE DATE 209
SECTION 15.12 REPEAL OF PRIOR ORDINANCE 209
SECTION 15.13 AUTHENTICATION 210

THE ISABELLA COUNTY ZONING ORDINANCE

Ordinance No. _____

AN ORDINANCE to establish zoning for the portion of Isabella County outside the limits of incorporated villages, cities and Townships with their own zoning pursuant to the provisions of Act 110 of the Public Acts of 2006, as amended, whereby the conservation of soil, water and other natural resources is encouraged and the use of land for agriculture, forestry, recreation, residence, industry, trade and such additional uses as may be present, or may occur, within the county shall be encouraged, regulated, or prohibited in accordance with the Comprehensive Plan of Isabella County. This ordinance repeals and replaces the Isabella County Zoning Ordinance, dated June 23, 1980 upon its effective date.

WHEREAS, Act 110, P.A. 2006 as amended, empowers the county to enact a zoning ordinance and to provide for its administration, enforcement and amendment; and

WHEREAS, the County Board of Commissioners of Isabella County deems it necessary for the purpose of promoting and protecting the health, safety, morals and general welfare of the people of the county to enact such an ordinance; and

WHEREAS, the county board, pursuant to the provisions of Act 282, P.A. 1945, as amended, has appointed a planning commission to formulate plans and recommendations for the most effective economic, social and physical development of the county; and

WHEREAS, the planning commission has adopted a comprehensive plan of growth and development in accordance with Act 282, P.A. 1945 as amended; and

WHEREAS, the planning commission has divided the county into districts and has prepared regulations pertaining to such districts in accordance with the adopted comprehensive plan; and

WHEREAS, the planning commission has submitted this ordinance to the county board; and

WHEREAS, the planning commission has given due notice of public hearing relating to zoning districts, regulations and restrictions and has held such public hearing; and

WHEREAS, all requirements of Act 110, P.A. 2006, as amended, and Act 282, P.A. 1945, as amended, with regard to the preparation of this ordinance and subsequent action of the county board have been met;

NOW, THEREFORE, BE IT ORDAINED BY THE COUNTY OF ISABELLA, MICHIGAN AS FOLLOWS:

ARTICLE 1
TITLE AND PURPOSE

SECTION 1.01 SHORT TITLE

This ordinance shall be known as the Isabella County Zoning Ordinance.

SECTION 1.02 PURPOSE

The zoning districts provided in this ordinance, and the regulations specified for each such district, have been developed in accordance with the recommendations of the comprehensive master plan and other pertinent studies conducted in compliance with the planning acts for the physical development of Isabella County. In their application and interpretation, the provisions of this ordinance shall be held to be minimum requirements adopted to promote the public safety, health and general welfare. Among other purposes, these provisions are designed to conserve lands, waters and other natural resources in the county for their most suitable purpose; to protect productive agricultural lands for agricultural uses; to reduce hazards to life and property from flooding, air, and water pollution; to secure safety from fire and other dangers; to promote the orderly development of urbanizing areas; to reduce the dangers of excessive public costs which result from unguided community development; to avoid undue concentration of population by regulating and limited the density and use of land; to lessen congestion in the public highways and streets; to facilitate the economical development of adequate streets and highways, educational and recreational and other public facilities and services; to insure appropriate locations and relationships of land uses; to ensure proper development of housing and commerce; and to enhance the social and economic stability of Isabella County.

SECTION 1.03 INTERPRETATION

The provisions of this Ordinance shall be held to be minimum requirements adopted for the promotion of the public health, safety, convenience, comfort, prosperity, and economic welfare. Where this Ordinance imposes greater restrictions upon the use of buildings, or other structures, or requires larger yards, or other open spaces, than are imposed or required by other provisions of law, ordinance, or deed restrictions, the provisions of this Ordinance shall prevail.

SECTION 1.04 SCOPE

This ordinance shall affect and regulate the use and occupancy of all land and every structure under county zoning jurisdiction. Where this ordinance imposes greater restrictions than those imposed or required by provisions of other laws, ordinances, private restrictions, covenants, deeds or other agreements, the provisions of this ordinance shall control.

SECTION 1.05 ZONING AFFECTS ALL STRUCTURES AND LAND AND THE USE THEREOF

No structure, land or premises shall hereafter be used or occupied and no buildings shall be erected, moved, reconstructed, extended or altered except in conformity with the regulations and provisions of this ordinance.

ARTICLE 2
DEFINITIONS

SECTION 2.01 DEFINITIONS "A"

ACCESSORY BUILDINGS AND STRUCTURES: A subordinate structure on the same lot with a main building, or principal use, occupied or devoted to an accessory use. Where an accessory building is attached to a main building by a common wall or a common roof, such accessory building shall be considered part of the main building. ***(97-02 Eff. January 2, 1998)***

ACCESSORY USE: Any use customarily incidental and subordinate to the main use of the premises.

ADULT BOOKSTORE: An establishment having a substantial or significant portion of its stock in trade, books, magazines and/or other periodicals which are distinguished or characterized by their emphasis on matters depicting, describing or relating to "specified sexual activities" or "specified anatomical areas" (as defined in this Ordinance) or an establishment with a segment or section devoted to the sale or display of such material. ***(89-04 Eff. October 19, 1989)***

ADULT ENTERTAINMENT: Any conduct which presents material by books, films, slides or the like or by live presentation which includes services to the patron of an establishment, which material is distinguished or characterized by an emphasis on matter depicting, describing or relating to "specified sexual activities" or "specified anatomical areas" (as defined in this ordinance). ***(89-04 Eff. October 19, 1989)***

ADULT MINI-MOTION PICTURE THEATER: An establishment with a capacity for less than 50 persons used for presenting material distinguished or characterized by an emphasis on matters depicting, describing or relating to "specified sexual activities" or "specified anatomical areas" (as defined in the Ordinance), for observation by patrons therein. ***(89-04 Eff. October 19, 1989)***

ADULT MOTION PICTURE THEATER: An establishment with a capacity of 50 or more persons used for presenting material distinguished or characterized by an emphasis on matters depicting, describing or relating to "specified sexual activities" or "specified anatomical areas" (as defined in this Ordinance), for observation by patrons therein. ***(89-04 Eff. October 19, 1989)***

AGRICULTURAL LABOR HOUSING: A tract of land and all tents, vehicles, buildings and other structures pertaining thereto which is established, occupied or used as living quarters for migratory workers engaged in agricultural activities including related food processing as licensed under the provisions of P.A. 289 of 1965, as amended.

AGRICULTURAL TOURISM: means the practice of visiting an agribusiness, horticultural, or farm operation, including, but not limited to, a farm, orchard, winery,

greenhouse, hunting preserve, a companion animal or livestock show, for the purpose of recreation, education, or active involvement in the operation, other than as a contractor or employee of the operation. ***(11-05 Eff. January 30, 2012)***

ALLEY: A dedicated public way other than a road which provides a secondary means of access to abutting property and is not intended for general traffic. ***(07-01 Eff. May 15, 2007)***

AMBIENT: The sound pressure level exceeded 90% of the time or L_{90}. ***(08-10 Eff. November 3, 2008)***

ANEMOMETER TOWER: A freestanding tower containing instrumentation such as anemometers that is designed to provide present moment wind data for use by the supervisory control and data acquisition (SCADA) system which is an accessory land use to a Wind Energy Conversion System. ***(08-10 Eff. November 3, 2008)***

ANTENNA: Any exterior transmitting or receiving device mounted on a communication tower and used in communications that regulate and capture electromagnetic waves, digital signals, analog signals, radio frequencies (excluding radar signals), wireless telecommunications signals or other communication signals. ***(01-02 Eff. October 4, 2001)***

APARTMENT: A room or suite of rooms, including bath and kitchen facilities intended or designed for use as a residence by a single family.

ARTERIAL STREET: A primary street or road which carries an uninterrupted flow of traffic from one major center to another. ***(89-05 Eff. January 26, 1990)***

SECTION 2.02 DEFINITIONS "B"

BASEMENT: A portion of a building which is partly below and partly above grade, but so

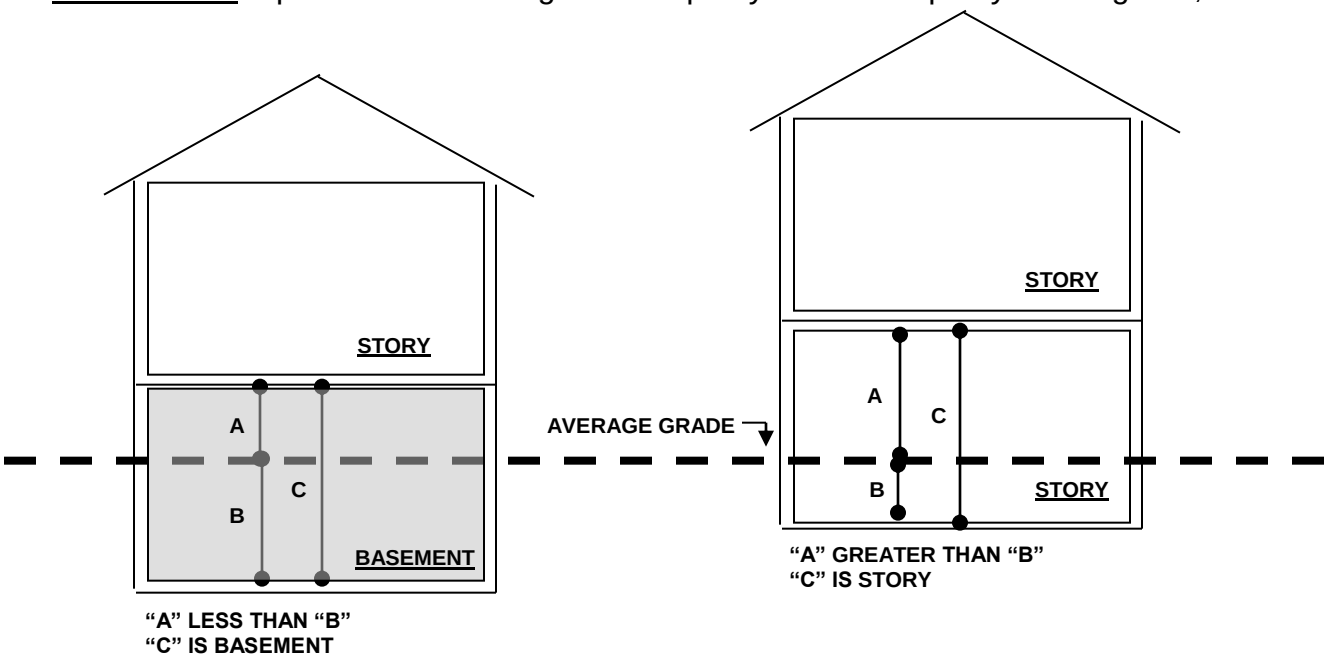

located that the vertical distance from grade to the basement floor is greater than the vertical distance from grade to basement ceiling. A basement shall not be counted as a story.

BED AND BREAKFAST ESTABLISHMENTS: A use within an owner occupied detached single family dwelling in which transient guests are provided a sleeping room, breakfast and access to bathing and lavatory facilities in return for payment. ***(01-03 Eff. November 16, 2001)***

BUILDING: Anything which is constructed or erected, either temporary or permanent, having a roof supported by columns, walls or any other supports, which is used for the purpose of housing, storing or enclosing persons, animals or personal property or carrying on business activities or similar uses, including tents, stands, cabins and manufactured homes. The definition of building shall include only those with at least 200 square feet of useable floor area. ***(01-05 Eff. January 2, 2002) (08-03 Eff. June 2, 2008)***

BORROW PIT: An area for the excavation of sand or gravel where the volume of material extracted will be less than 10,000 cubic yards or an area for the excavation of sand or gravel which is three acres or less in size. ***(93-04 Eff. June 19, 1993)***

BUIDLING, HEIGHT OF: The vertical distance measured from the mean elevation of the finished grade line of the ground at the front of the building to the highest point of the roof for flat roofs; to the deck line of mansard roofs; and the mean height level between eaves and ridge for gable, hip and gambrel roofs.

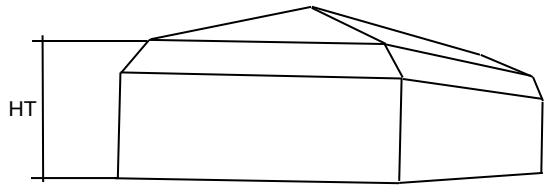

MANSARD ROOF

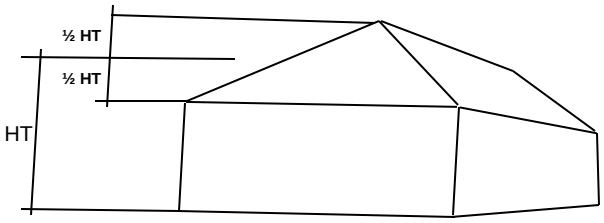

HIP ROOF

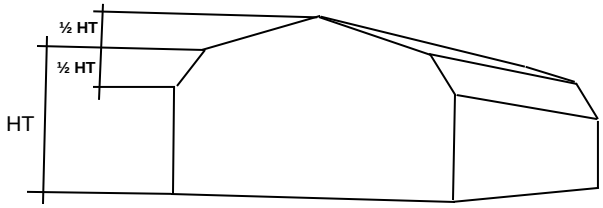

GAMBREL ROOF

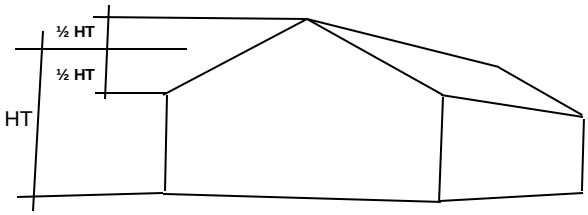

GABLE ROOF

NOTE:

HT. – HEIGHT OF BUILDING

SECTION 2.03 DEFINITIONS "C"

CAMPER: Any individual who occupies a campsite or otherwise assumes control or charge of, or is placed in charge of a campsite. ***(95-03 Eff. June 20, 1997)***

CAMPGROUND: A parcel or tract of land under the control or charge of a person in which campsites are offered for the use of the public or members of an organization, either free of charge or for a fee, for the establishment of temporary living quarters including but not limited to two or more tents or recreational vehicles. ***(95-03 Eff. June 20, 1997)***

CAMPSITE: Land within a campground intended for the exclusive occupancy by a tent or recreational vehicle or other temporary living structure or vehicle under the control or charge of a camper. ***(95-03 Eff. June 20, 1997)***

CEMETERY: A place for the burial of the dead; graveyard ***(08-02 Eff. April 19, 2008)***

CHILD CARE FACILITIES, includes: ***(01-01 Eff. August 1, 2001)***

A. Family Child Care Homes: as defined and regulated by Public Act No. 116 of the Public Acts of 1973, as amended. A private home in which one (1), but less than seven (7) minor children are received for care and supervision for less than 24 hours a day. A Family Child Care Home includes a home that gives care to an unrelated minor child for more than four (4) weeks during a calendar year. ***(08-05 Eff. June 2, 2008)***

B. Group Child Care Homes: as defined by Public Act No. 116 of the Public Acts of 1973, as amended. A private home in which more than six (6), but less than twelve (12) minor children are received for care and supervision for less than 24 hours a day. A Group Child Care Home includes a home that gives care to an unrelated minor child for more than four (4) weeks during a calendar year. ***(08-05 Eff. June 2, 2008)***

C. Child Care Centers: as defined by Public Act N. 116 of the Public Acts of 1973, as amended. A licensed facility other than a private home where one or more minor children are received for care and supervision for less than 24 hours a day. ***(08-05 Eff. June 2, 2008)***

COLLOCATION: Placing or installing communication equipment on an existing communication tower or in an existing equipment compound. ***(01-02 Eff. October 4, 2001) (12-01 Eff. September 3, 2012)***

COMMERCIAL AGRICULTURE: The use of land and/or structures for growing and/or production of farm products for income including such operations as dairy farms, grazing and forage, raising of farm animals and production of farm produce, agricultural

services, animal husbandry or horticultural services, hay baling and threshing, fruit picking, harvesting and tilling.

COMMUNICATION TOWER: Any structure that is designed and constructed to support one or more antennas for telephone, radio and similar communication purposes, including self supporting lattice towers, guyed towers, or monopole towers. The term includes radio and television transmission towers, microwave towers, common-carrier towers, cellular telephone towers and the like. The term includes the structure and any support thereto, excluding those used exclusively for amateur radio operations, dispatch communications associated with an individual business establishment or a governmental agency, or domestic radio and television reception, provided all restrictions set forth herein are met. ***(01-02 Eff. October 4, 2001)***

COMMUNICATIONS EQUIPMENT: The set of equipment and network components used in the provision of wireless communications services, including, but not limited to, antennas, transmitters, receivers, base stations, equipment shelters, cabinets, emergency generators, power supply cables, and coaxial and fiber optic cables, but excluding communication towers. ***(12-01 Eff. September 3, 2012)***

COMMUNICATIONS EQUIPMENT COMPOUND: An area surrounding or adjacent to the base of a communications tower and within which wireless communications equipment is located. ***(12-01 Eff. September 3, 2012)***

CONDOMINIUM PROJECT: A project consisting of not less than two (2) condominium units if established and approved in conformance with the Condominium Act (Act 59, 1978). ***(95-03 Eff. June 20, 1997)***

CONDOMINIUM SUBDIVISION: A division of land on the basis of condominium ownership, which is not subject to the provisions of the Subdivision Control Act of 1967, Public Act 288 of 1967, as amended. ***(95-03 Eff. June 20, 1997)***

CONDOMINIUM SUBDIVISION PLAN: The drawings attached to the master deed for a condominium subdivision which describes the size, location, area, horizontal and vertical boundaries ad volume of each condominium unit contained the condominium subdivision, as well as the nature, location and size of common elements. ***(95-03 Eff. June 20, 1997)***

CONDOMINIUM UNIT: That portion of a condominium project or condominium subdivision which is designed and intended for separate ownership and use, as described in the master deed, regardless of whether it is intended for residential, office, industrial, business, recreational, use as a time-share unit, or any other type of use. The owner of a condominium unit also owns a share of the common elements. The term “condominium unit” shall be equivalent to the term “lot” for purposes of determining compliance of the condominium subdivision with the provisions of this Ordinance pertaining to the minimum lot area, minimum lot width, and maximum lot coverage. ***(95-03 Eff. June 20, 1997)***

CONFINED FEEDLOT: An operation where live animals or poultry are concentrated or restricted to an area more limited than to natural feeding habitats or where there are a total of 500 animals units on any one parcel or area using the following scale:

Number Of Animals	Animal Type
500	Slaughter or feeder cattle
350	Mature dairy cattle (whether milked or dry cows)
1,250	Swine each weighing 55 pounds or more
250	Horses
5,000	Sheep or Lambs
27,500	Turkeys
50,000	Laying hens or broilers (if the facility has a continuous overflow watering)
15,000	Laying hens or broilers (if the facility has a liquid manure system)
2,500	Ducks

CONVENIENCE CENTER: A place where primary petroleum products such as gasoline, motor oil, or diesel fuel are sold at retail, and limited grocery items are sold. Said facility does not include establishments where auto repairs are made. ***(89-05 Eff. January 26, 1990)***

CREMATORY: A building or structure, within which the remains of deceased persons are or are intended to be cremated. ***(08-02 Eff. April 19, 2008)***

CUL-DE-SAC: A local road of short length, having one end open to traffic and being permanently terminated at the other end by a vehicular turn around. ***(07-01 Eff. May 15, 2007)***

SECTION 2.04 DEFINITIONS "D"

dB(A): The sound pressure level in decibels. It refers to the "a" weighted scale defined by the American National Standards Institute (ANSI). A method for weighting the frequency spectrum to mimic the human ear. ***(08-10 Eff. November 3, 2008)***

DECIBEL: The unit of measure used to express the magnitude of sound pressure and sound intensity. ***(08-10 Eff. November 3, 2008)***

DRIVEWAY: A means of access for vehicles from a public road, private road or approved alley across a lot or parcel. ***(07-01 Eff. May 15, 2007)***

DWELLING: Any building, or portion thereof, used or designed for the residence of a person or persons, with families for such humans to sleep, cook and eat; but not including motels, hotels or tourist cabins.

Dwelling, Single Family: means a detached building designed and occupied exclusively by one family.

Dwelling, Two Family: means a detached or duplex building designed and occupied exclusively by two families living independently of each other; each family living in separate dwellings.

Dwelling, Multiple Family: means a building, or portion thereof, used and designed to contain separate living quarters for three or more families; but which may have joint services or facilities.

DWELLING UNIT: One or more rooms designed or used as an independent housekeeping establishment for one family and containing kitchen facilities, including a stove or cooking device and a permanently installed sink, bathroom facilities and sleeping facilities.

DWELLING UNIT, FARM: A dwelling unit located on a farm which is used or intended for use by the farm's owner, operator or person employed thereon. Only one farm dwelling shall be permitted on each farm.

DWELLING UNIT, NONFARM: A dwelling unit located within the AG-1, AG-2, or AG-3 District which is not a farm dwelling unit and which is designed for occupancy by a single family.

SECTION 2.05 DEFINITIONS "E"

ESSENTIAL SERVICES: The erection, construction, alteration or maintenance of overhead or surface or underground gas, electrical, steam or water distribution or transmission or collection systems; communication systems; supply or disposal systems; including mains, drains, sewer, pipes, conduits, tunnels, wire cables, fire alarm boxes, police call boxes, traffic signals, hydrants, towers, poles, electrical substations, gas regulator stations, and other similar equipment and accessories in connection therewith, reasonably necessary for furnishing adequate services for the public health, safety, or welfare by public utilities or municipal departments or commissions. An essential service shall not include communication towers or antennas. ***(01-02 Eff. October 4, 2001)***

EXCAVATION-TRANSPORTATION SERVICES: Excavation-Transportation Services shall include farm drainage, water and sewer line construction, septic systems, and related excavation and transportation businesses. ***(92-08 Eff. January 21, 1993)***

EXISTING LOT: A parcel of land created prior to the adoption of this ordinance, exclusive of any adjoining street or road right-of-way, separated from adjacent parcels of land by a description as on a recorded deed, recorded subdivision plat, survey map or metes and bounds.

SECTION 2.06 DEFINITIONS "F"

FAMILY: A Family shall be defined by one of the following: ***(01-04 Eff. January 2, 2002)***

One (1) or more persons related by blood, marriage, adoption, or guardianship, plus not more than two (2) persons not so related, who are either domestic employees, care givers, such as a nurse, nanny, or physical therapist, or persons who occupy rooms for which compensation may or may not be paid, living together as a single housekeeping unit.

Two (2) persons and their offspring, plus not more than two (2) persons not related, who are either domestic employees, care givers, such as a nurse, nanny, or physical therapist, or persons who occupy rooms for which compensation may or may not be paid.

A Functional Family living together as a single housekeeping unit.

FARM: Except as provided below, a farm is real property used for commercial agriculture comprising of at least 40 contiguous acres which may contain other non-contiguous acreage, all of which is operated by a sole proprietorship, partnership or corporation and including all necessary farm buildings, structures and machinery.

A tract may be considered a farm if it is between five and 40 acres, provided it is devoted primarily to an agricultural use and has produced a gross annual income from agriculture of $200.00 per year or more per acre of cleared and tillable land.

A specialty farm may be considered a farm if designated by the Department of Agriculture. ***(16-05 Eff. August 1, 2016)***

FARM ANIMALS: Livestock, including beef and dairy cattle, goats, hogs, horses, poultry, sheep and other fur-bearing animals.

FARM BUIDING: Any building or accessory structure other than a farm or a non farm dwelling unit, which is used for farm operations such as, but not limited to, a barn, grain bin, silo, farm implement storage building and/or milk house.

FARM MARKET: means the sale of farm products, farm related products or value-added farm products, directly to the consumer from a site on a working farm; agricultural land; or any agricultural, horticultural or agribusiness operation. ***(11-05 Eff. January 30, 2012)***

FARM OPERATION: A condition or activity which occurs on a farm in connection with the commercial production of farm products and includes, but is not limited to: Marketed products at roadside stands or farm markets; noise; odors; dust; fumes; operation of machinery and irrigation pumps; ground and aerial seeding and spraying; the

application of chemical fertilizers, conditioners, insecticides, pesticides and herbicides; and the employment and use of labor.

FARM PRODUCTS: Those plants and animals useful to man includes, but is not limited to: forages and sod crops, grains and feed crops, dairy and dairy products, poultry and poultry products; livestock, including breeding and grazing, fruits, vegetables, flowers, seeds, grasses, trees, fish, apiaries, equine and other similar products; or any other product which incorporates the use of food, feed, fiber or fur.

FARM RELATED PRODUCTS: means items sold at a farm market to attract customers and promote the sale of farm products. Such items include, but are not limited to all farm and horticultural products, animal feed, baked goods, ice cream and ice cream based desserts and beverages, jams, honey, gift items, food stuffs, clothing and other items promoting the farm and agriculture in Michigan and value added farm products and production on site. ***(11-05 Eff. January 30, 2012)***

FILLING STATIONS: Any place where primary petroleum products such as gasoline, motor oil or diesel fuel are sold at retail and auto repairs may be made as a secondary activity. ***(89-05 Eff. January 26, 1990)***

FENCES OR WALLS: Upright structures or barriers of wood, stone, brick, metal, rails, posts, wire mesh, etc. designed to enclose, protect, divide, confine or define a boundary.

FUEL STORAGE FACILITY: Facilities for the storage of propane and other related fuel sources solely for the personal, residential use of the owner or occupant of the lot it is located upon, and in no way shall fuel storage facilities include commercial sales.

FUNCITIONAL FAMILY: A group of persons, plus their offspring having a relationship which is functionally equivalent to a family. The relationship must be of a permanent and distinct character with a demonstrable and recognizable bond characteristic of a cohesive unit. A Functional Family shall not include any society, club, fraternity, sorority, association, lodge, organization, or group of students or other individuals exceeding four (4) persons in number, where the common living arrangement or basis for the establishment of the housekeeping unit is temporary. ***(01-04 Eff. January 2, 2002)***

SECTION 2.07 DEFINITIONS "G"

GARAGE, PRIVATE: A detached accessory building or portion of a main building, used for the storage of passenger vehicles and not more than one truck of a rated capacity of two tons.

SECTION 2.08 DEFINITIONS "H"

HOME OCCUPATION: Occupations engaged within a dwelling or on the premises of a dwelling by the residents of the same. The occupation shall be incidental and subordinate to the principal use of the building for residential purposes.

HOUSEHOLD PETS: Any domesticated dog, cat or other animal kept for protection, companionship or hunting purposes; provided they are not kept, bred or maintained for commercial purposes.

SECTION 2.09 DEFINITIONS "I"

INOPERATIVE MOTOR VEHICLE: A motor vehicle which is incapable of being operated under its own power.

SECTION 2.10 DEFINITIONS "J"

(reserved for future use)

SECTION 2.11 DEFINITIONS "K"

KENNEL: Any lot or premises used for the keeping, sale, boarding or breeding of more than four dogs, cats, or other household pets or any combination thereof, for specified compensation.

SECTION 2.12 DEFINITIONS "L"

LOCAL ROAD: A public or private road with local traffic volumes, the principal use or function of which is to give access to abutting properties. ***(07-01 Eff. May 15, 2007)***

LOT: Land described in a recorded plat or by metes and bounds description and a condominium unit in a condominium subdivision, occupied or to be occupied by a building, structure, land use or group of buildings having sufficient size and shape to comply with the use, coverage, lot area, yards, setbacks and other open space requirements of this Ordinance. Each lot shall have frontage upon a public or private road right-of-way or easement as required by this Ordinance. ***(95-03 Eff. June 20, 1997)***

LOT, CORNER: A lot situated at the intersection of two or more streets having an angle of not more than 135 degrees.

LOT LINE: The line which defines the boundaries of a lot or parcel of land.

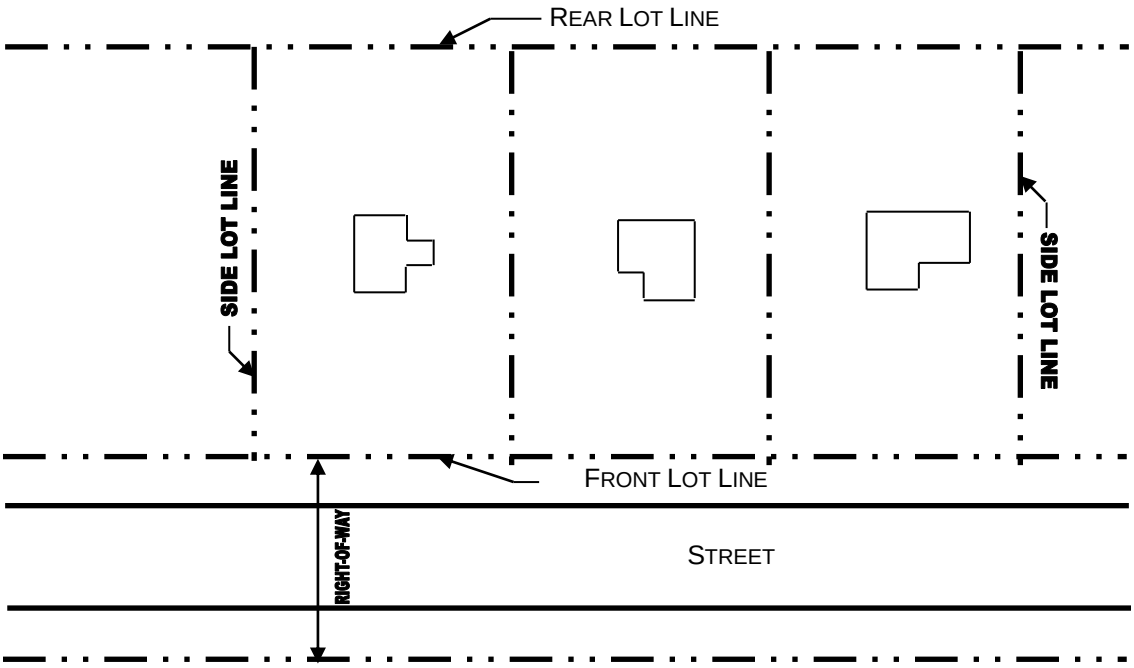

A. Front Lot Line: The line which separates the front yard from the road right-of-way. ***(09-01 Eff. August 3, 2009)***

B. Rear Lot Line: The lot line opposite the front lot line. In the case of a lot pointed at the rear, the rear lot line shall be an imaginary line parallel to the front lot line, not less than ten (10) feet long lying farthest from the front lot line and wholly within the lot. ***(09-01 Eff. August 3, 2009)***

C. Side Lot Line: Any lot lines other than the front lot line or rear lot line. ***(09-01 Eff. August 3, 2009)***

LOT OF RECORD: A lot which is part of a subdivision, the map of which has been recorded in the Office of the County Register of Deeds, or a tract, parcel or lot described by metes and bounds, the deed to which has been recorded in the Office of the County Register of Deeds prior to the adoption or amendment of this Ordinance. ***(97-02 Eff. January 2, 1998)***

LOT, WATERFRONT: A lot which fronts on a navigable waterway, as defined in State Law. ***(09-01 Eff. August 3, 2009)***

SECTION 2.13 DEFINITIONS "M"

MAJOR THOROUGHFARE: A public road, the principal use or function of which is to provide a paved arterial route for fast and/or heavy through traffic with its secondary use or function the provision of access to abutting property. Major thoroughfares include State and Federal highways all of which are hard surfaced or paved. ***(07-01 Eff. May 15, 2007)***

MANUFACTURED HOME*:* A structure designed or used for residential occupancy built upon or having a frame or chassis to which wheels may be attached so it may be moved upon a highway, whether or not such structure actually has, at any given time, such wheels attached, or is jacked up or skirted. ***(08-03 Eff. June 2, 2008)***

MANUFACTURED HOME COMMUNITY*:* Any plot of ground upon which two (2) or more manufactured homes, occupied for dwelling or sleeping purposes, are or may be located, and licensed as such by the State of Michigan. ***(08-03 Eff. June 2, 2008)***

MANUFACTURED HOME SITE*:* A site dedicated for the placement of a manufactured home within a manufactured home community. The site shall be exclusive of drives and required open space in the manufactured home community, or other open areas not specifically used for manufactured home occupancy. ***(08-03 Eff. June 2, 2008)***

MASSAGE ESTABLISHMENT: Any establishment where massages are administered for pay, including but not limited to, massage parlors, health clubs, sauna baths, and steam baths. This definition shall not be construed to include a hospital, nursing home, medical clinic, or the office of a physician, surgeon, chiropractor, osteopath or physical therapist duly licensed by the State of Michigan, nor barbershop or beauty shop in which massages are administered only to the scalp, the face, the neck or the shoulders. This definition shall not be construed to include the following facilities or persons duly licensed by the State of Michigan: a hospital, nursing home, medical clinic, physician, surgeon, chiropractor, osteopath, or physical therapist and their respective authorized employees, nor a public or nonprofit organization such as a school, park department, YMCA or YWCA operating a community center, swimming pool or other educational, cultural, recreational facilities for residents of the area. ***(89-04 Eff. October 19, 1989)***

MASTER DEED: The document recorded as part of a condominium subdivision project to which are attached as exhibits and/or incorporated by reference the approved bylaws for the condominium subdivision and the condominium subdivision plan. ***(95-03 Eff. June 20, 1997)***

MINERAL EXTRACTION INDUSTRY: Mineral extraction industries shall include earth removal, quarrying, gravel processing, mining and related mineral extraction businesses. Borrow Pits authorized by this Zoning Ordinance are not Mineral Extraction Industries. ***(93-04 Eff. June 19, 1993)***

MODULAR (PRE-MANUFACTURED) HOUSING UNIT: A dwelling unit constructed solely within a factory, as a single unit, or in various sized modules or components, which are then transported by truck or other means to a site where they are assembled on a permanent foundation to form a single-family dwelling, and meeting all codes and regulations applicable to conventional singe-family dwelling, and meeting all codes and regulations applicable to conventional single-family home construction. (***95-03 Eff. June 20, 1997)***

MORTUARY: A place where dead bodies are kept before burial or cremation, as a morgue or funeral home. ***(08-02 Eff. April 19, 2008)***

MOTOR VEHICLE REPAIR FACILITY: A place where repairs are made to motor vehicles and primary petroleum products such as gasoline, motor oil, or diesel fuel may be sold at retail as a secondary activity. ***(89-05 Eff. January 26, 1990)***

SECTION 2.14 DEFINITIONS "N"

NONCONFORMING, BUILDING OR USES: Any use, building or portions thereof, lawfully existing at the time this ordinance became effective and which does not comply with its regulations or any subsequent amendments thereto. ***(89-05 Eff. January 26, 1990)***

SECTION 2.15 DEFINITIONS "O"

OFFSPRING: Offspring means descendants, including biological offspring, adopted children, step children, foster children, and legal wards. ***(01-04 Eff. January 2, 2002)***

ON SITE WIND ENERGY CONVERSION SYSTEM: A land use for generating electric power from wind and is an accessory use that is intended to primarily serve the needs of the consumer at that site. ***(08-10 Eff. November 3, 2008)***

OPEN SPACE: Any unoccupied space, devoid of structures and open to the sky on the same lot with a building.

ORDINARY HIGH WATER MARK: The line between upland and bottomland which persists through successive changes in water levels, below which the presence and action of the water is so common or recurrent that the character of the land is marked distinctly from the upland and is apparent in the soil itself, the configuration of the surface of the soil and the vegetation. On an inland lake which has a level established by law, it means the high established level. Where water returns to its natural level as the result of the permanent remodel or abandonment of a dam, it means the natural ordinary high water mark.

OUTDOOR RECREATIONAL FACILITIES: Outdoor recreational facilities shall include campgrounds, nature centers, riding stables, wildlife sanctuaries, conservation clubs, hunting clubs and gun clubs.

SECTION 2.16 DEFINITIONS "P"

PARKING AREA: Any area, other than a street or other public way, used for the parking of motor vehicles. A marking area may be accessible for public or private use as an accommodation for residents, clients, customers or employees licensed motor vehicles.

PARKING SPACE: An area readily accessible by motor vehicles being not less than 180 square feet and shaped satisfactorily for such use. A parking space is exclusive of access drives and aisles and it not located on a public street or alley right-of-way. Spaces in tandem shall counts as one space.

PERSON: A legal entity, including a body politic or corporate, as well as individual human beings or individuals with common interests or enterprise.

PETROLEUM BULK PLANT: An establishment for the storage of petroleum products, in bulk and/or in packages for the distribution by tank car, tank vehicle or motor truck.

PLANNED UNIT DEVELOPMENT A development which permits integrated and coordinated residential dwelling and/or certain non-residential uses all to be developed according to approved plans as provided in Article 13.

PEDATORY OR WIDE ANIMALS: Any animal not bred by humans or any animal which is likely to cause the death, maiming or illness of a human, including but not limited to the following animals:

Alligator, Badger, Dog (wild family), Primate, Bear, Ferret, Skunk, Cat (wild family), Coyote, Lizard (poisonous) and Weasel.

PRINCIPAL OR MAIN BUILDING: A building in which is conducted the principal or main use of the lot on which it is situated. ***(09-01 Eff. August 3, 2009)***

PRINCIPAL OR MAIN USE: The primary or predominant use of a lot or structure.

PRIVATE ROAD: An undedicated, privately controlled and maintained easement or other interest in land that provides the means of access to one (1) or more lots or parcels. The term "road" shall be synonymous with the terms street, avenue, place, way, drive, lane, boulevard, or other thoroughfare. ***(07-01 Eff. May 15, 2007)***

PUBLIC ROAD: A public dedicated right-of-way, other than an alley. ***(07-01 Eff. May 15, 2007)***

PUBLIC ROAD AUTHORITY: The Isabella County Road Commission or Michigan Department of Transportation having jurisdiction over the roadway. ***(07-01 Eff. May 15, 2007)***

PUBLIC UTILITY: Any person, firm or corporation duly authorized to furnish to the public, under state or municipal regulations, electricity, gas, steam, communications or water.

PUBLIC OR INSTITUTIONAL USES: Churches; accredited public, parochial or private schools; trade schools or colleges; hospitals; parks, nonprofit recreational uses;

libraries; government owned facilities; fire stations or similar uses providing services necessary to the community.

SECTION 2.17 DEFINITIONS "Q"

(Reserved for future use)

SECTION 2.18 DEFINITIONS "R"

RECREATIONAL VEHICLE: A vehicular transportable structure mounted on wheels that is self-propelled or towed by a motor vehicle and which is designed to provide temporary living quarters for recreational camping or travel use. This definition includes, but is not limited to, portable structures commonly known as: motor homes, travel trailers, travel homes, fold down campers, trucks mounted campers, converted buses and fifth wheels. ***(93-04 Eff. June 19, 1993)***

RECREATIONAL VEHICLE PARK: All lands and structures which are owned and/or operated by private individuals, a business or corporation which is predominantly intended to accommodate the use of recreational vehicles and may provide for outdoor recreational activities. ***(95-03 Eff. June 20, 1997)***

RECYCLING DROP-OFF SITE: A designated site where residents may bring sorted recyclable materials for processing and handling, which shall be operated in a manner that will control litter and pestilence. ***(92-08 Eff. January 21, 1993)***

RESIDENTIALLY ZONED AREA: For the purpose of this Ordinance, shall mean any area zoned as an R-1, R-2, L-R or Residential PUD District or any area zoned Residential by an adjacent municipality. ***(89-04 Eff. October 19, 1989)***

RIGHT-OF-WAY: A road, alley, or other thoroughfare or easement permanently established for passage of persons, vehicles, or the location of utilities. The right-of-way is delineated by legally established lines or boundaries. ***(07-01 Eff. May 15, 2007)***

ROAD LINE: The legal line of demarcation between a road or road and abutting land, which is also known as the edge or furthest extreme of the right-of-way. ***(07-01 Eff. May 15, 2007)***

ROADSIDE STAND: A structure for the display and sale of agricultural products with no space for customers within the structure itself.

RURAL PRODUCTION AND PROCESSING FACILITIES: An activity or operation of a restricted nature, including, but not limited to, the assembly, processing, or packaging of tool, die, and machine products; the assembly or repair of electrical instruments and devices; and the assembly or finishing of cabinetry or wood products. The use shall be located in an accessory structure on a lot and the principal use of that lot shall be as a farm or non-farm dwelling. ***(02-05 Eff. February 11, 2003)***

SECTION 2.19 DEFINITIONS "S"

SALVAGE YARDS: An area where waste, used or second hand materials are brought and sold, exchanged, stored, baled, packed, disassembled or handled. Waste items shall include, but shall not be limited to: scrap iron and other metals, paper, rags, rubber tires and bottles. Salvage yards shall also include the dismantling, storage, salvaging or repair of automobiles or other vehicles, or of machinery or parts thereof.

SEPTAGE WASTE: The fluid mixture of untreated and partially treated sewage solids, liquids and sludge of human or domestic origin which is removed from a wastewater system. Septage waste consists only of food establishment septage, domestic septage, domestic treatment plant septage or sanitary sewer cleanout septage, or any combination of these as defined by Act 451 of the Public Acts of 1994, as amended. ***(10-02 Eff. August 2, 2010)***

SEPTAGE WASTE STORAGE FACILITY: A structure, including lagoons, that receives septage waste for temporary storage but not for treatment. ***(10-02 Eff. August 2, 2010)***

SETBACK: The distance required to comply with the minimum front, side or rear yard open space provisions of this ordinance. Setback shall be measured by the shortest distance from lot line to the nearest portion of the building or structure, excluding steps. ***(09-01 Eff. August 3, 2009)***

SHADOW FLICKER: Alternating changes in light intensity caused by the moving blades of a wind energy conversion system casting shadows on the ground and stationary objects, such as but not limited to a window of a dwelling. ***(08-10 Eff. November 3, 2008)***

SHOPPING CENTER: A development devoted almost exclusively to retail sales and services. The development includes at least four separate retail businesses which may be leased or individually owned. ***(11-03 Eff. January 30, 2012)***

SIGN: Sign shall mean and include every individual announcement, declaration, demonstration, display, illustration, insignia, surface or space when erected or maintained to the out of doors in view of the general public for identification, advertisement or promotion of the interests of any person. This definition shall include billboard signs, signs painted directly on walls of structures, and temporary signs. ***(11-03 Eff. January 30, 2012)***

SIGNS (DEFINITIONS RELATING TO): ***(11-03 Eff. January 30, 2012)***

A. Area: The total square footage of a sign face exposed to public view.

B. Awning Sign: A sign which is part of, hung from the underside of, or attached to, a marquee, canopy, or other covered structure projecting from and supported by

a building and does not project horizontally beyond or vertically above said marquee, canopy, or covered structure.

C. Banner Sign: An unsecure, sign made of natural, flexible, synthetic or plastic material used to call attention to a land use or product, service or activity; however, not including pennants or flag.

D. Billboard: A sign structure which exceeds one hundred (100) square feet advertising a service, commodity or establishment, which is not sold, produced, manufactured, or furnished at the property on which said sign is located, also known as "off-premise sign" or "outdoor advertising structure".

E. Bulletin Board: A sign which identifies an institution or organization on the premises where it is located and which contains the name of the institution or organization, the names of individuals connected with it, and general announcements of events or activities occurring at the institution or similar messages.

F. Directional Sign: Signs limited to directional messages, principally for pedestrian or vehicular traffic, such as "one way", "entrance" and "exit"

G. Double-Face Sign: A sign, both sides of which are visible and used as signs. A "V" type sign shall be considered a double-face sign provided the least angle of intersection does not exceed ninety (90) degrees.

H. Electronic Message Board: A sign on which copy changes automatically on a lamp bank or through mechanical means, e.g., electrical or electronic time and temperature units.

I. Flag Sign: A sign made of natural, synthetic or plastic material having a distinctive size, color and design used as a symbol or emblem.

J. Flashing Sign: Any illuminated sign on which the artificial light is not maintained stationary or constant in intensity or color at all times while in use.

K. Free-Standing Sign: Any non-movable sign not affixed to a building.

L. Height: The height of sign shall mean the maximum vertical distance from the uppermost extremity of a sign or sign support to the average ground level at the base of the sign.

M. Illuminated Sign: Any sign designed to give forth artificial light, or designed to reflect any such light given from any source which is intended to cause such light or reflection.

N. Monument sign: A sign affixed to the ground with a full footing where the display surface is less than two (2) feet above the grade to the bottom of the display area.

O. Name Plate: A two square foot sign located on premises, giving the name or address, or both, of the owner or occupant of a building or premises.

P. Off-Premise Sign: A sign located on a different parcel of land or lot or premise than where the business, product, service, event, or person or subject is being advertised.

Q. On-Premise Sign: A sign located on the parcel of land or lot advertising a business, product, service, event, person or subject being offered on said parcel of land or lot.

R. Pennant Sign: A small, often triangular, tapering flag used in multitudes as a device to call attention to a land use or activity.

S. Pole Sign: An advertising structure which is supported by one or more uprights in permanent footings with all parts of the display surface of the sign eight (8) feet or more above the grade at the base of the sign.

T. Political Sign: Signs announcing the candidacy of persons running for public office or issue to be voted upon at an election and other information pertinent thereto.

U. Portable (Temporary) Sign: A sign which is not permanently affixed to a building (wall sign), structure (pole sign) or the ground (monument sign). Portable or temporary signs include without limitation signs supported on wooden posts, mobile chassis, motor vehicle, banners, flags, and pennants.

V. Projecting Sign: A sign which is attached directly to and perpendicular with a building wall and extends more than twelve (12) inches from the face of said wall

W. Residential Entranceway Sign: A permanent structure including but not limited to walls, columns and gates, marking entrances to single-family subdivisions or multiple housing projects by name, symbol, or otherwise.

X. Real Estate Sign: A sign advertising that the premises on which it is located is for sale, lease, or rent.

Y. Roof Sign: A sign which is erected, constructed and maintained upon or above the roof, or parapet wall of a building which is wholly or partially supported by said building.

Z. Sign Setback: The minimum linear distance as measured from the road right-of-way line to the nearest part of the sign or advertising structure.

AA. Window Sign: A sign that is applied or attached to the exterior or interior of a window or located in such a manner within a building that it can be seen from the exterior of the structure through a window.

BB. Wall Sign: A sign fastened to or painted on the wall of a building or structure in such a manner that the wall becomes the supporting structure for, or forms the background surface of the sign and which does not project more than twelve (12) inches from said building or structure.

SINGLE OWNERSHIP: Ownership by one or more persons, whether jointly as tenants as a whole or as tenants in common, of a parcel of real property.

SOLID WASTE DISPOSAL AREA: A solid waste transfer facility, incinerator, sanitary landfill, processing plant, or solid waste handling or disposal facility utilized in the disposal of solid waste as defined in the Solid Waste Management Act, Act 641, P.A. of 1978.

SOUND PRESSURE: An average rate at which sound energy is transmitted through a unit area in a specified direction. The pressure of the sound measured at a receiver. ***(08-10 Eff. November 3, 2008)***

SOUND PRESSURE LEVEL: The sound pressure mapped to a logarithmic scale and reported in decibels (dB). ***(08-10 Eff. November 3, 2008)***

SPECIFIED ANATOMICAL AREAS: Less than completely covered (a) human genitals, pubic region, (b) buttock, and (c) female breast below a point immediately above the top of the areola. Also, human male genitals in a discernibly turgid state, even if completely and opaquely covered. ***(89-04 Eff. October 19, 1989)***

SPECIFIED SEXUAL ACTIVITIES: Human genitals in a state of sexual stimulation or arousal; acts of human masturbation, sexual intercourse or sodomy; fondling or other erotic touching of human genitals, pubic region, or buttock or female breast. ***(89-04 Eff. October 19, 1989)***

STATE LICENSED RESIDENTIAL FACILITY: A structure constructed for residential purpose which provides resident services for persons under 24-hour supervision or care. Said homes shall be licensed or regulated under Act No. 287 of P.A. of 1972, Act No. 116 of P.A. of 1973, and Act No. 218 of P.A. of 1979, as amended. Those facilities having 6 or less persons are allowed in all residential districts, including those zoned for single-family dwellings, and shall not be subject to a special use or procedure different from those required for other dwellings of similar density in the same district. ***(89-05 Eff. January 26, 1990)***

STORY: A portion of a building included between the upper surface of any floor and the upper surface of the floor next above, except that the topmost story shall be that portion of a building included between the upper surface of the topmost floor and the ceiling or roof above. A basement shall not be counted as a story.

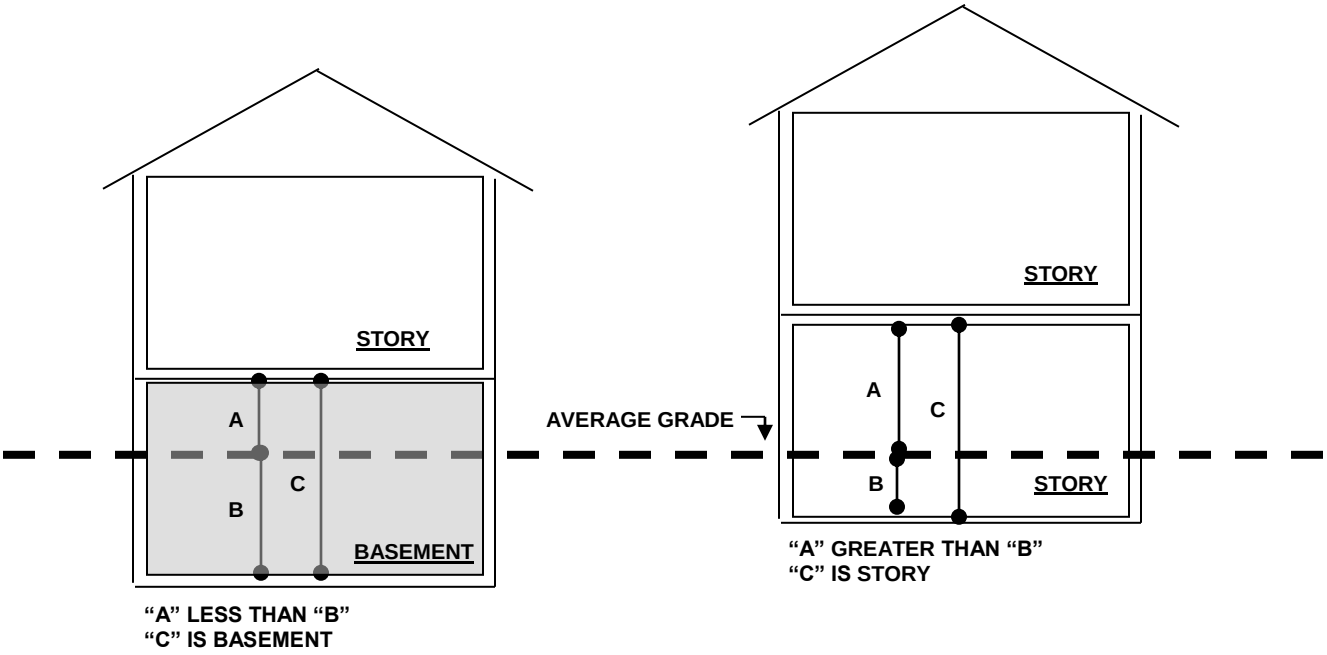

STRUCTURE: Anything constructed or erected, the use of which requires permanent location on the ground or anything attached to something having permanent location on the ground.

SUBDIVISION: The partitioning or dividing of a parcel or tract of land in compliance with Act 288 of the Public Acts of 1967 of the State of Michigan, as amended.

SWIMMING POOL: A constructed basin or structure for the holding of water for swimming and aquatic recreation. Swimming pool does not include plastic, canvas or rubber portable pools temporality erected upon the ground and holding less than 300 gallons of water.

SECTION 2.20 DEFINITIONS "T"

TENT: A collapsible shelter of canvas or other fabric stretched and sustained by poles or ropes and used for camping outdoors. ***(95-03 Eff. June 20, 1997)***

SECTION 2.21 DEFINITIONS "U"

UNDERGROUND HOME: A residence with sides which are either partially or totally below grade designed as a complete living unit. An underground home shall include earth-bermed, earth sheltered and envelope homes and similar dwelling units. The

underground home shall be at grade on one side or have one exit at a common grade to the interior of the home.

USE: The purpose consistent with its design or arrangement, for which land, a structure or a building is or may be applied, employed, or occupied. ***(93-04 Eff. June 19, 1993)***

UTILITY GRID WIND ENERGY CONVERSION SYSTEM: A land use for generating electric power from wind and is designed and built to provide electricity to the electric utility grid, including accessory uses such as but not limited to an anemometer tower and electric substation. ***(08-10 Eff. November 3, 2008)***

SECTION 2.22 DEFINITIONS "V"

VALUE-ADDED FARM PRODUCT: means the enhancement or improvement of the overall value of an agricultural commodity or of an animal or plant product to a higher value. The enhancement or improvement includes, but is not limited to marketing, agricultural processing, transforming, or packaging, education presentation, activities and tours. ***(11-05 Eff. January 30, 2012)***

SECTION 2.23 DEFINITIONS "W"

WIND ENERGY CONVERSION SYSTEM (WECS): A land use for generating power by use of wind; utilizing use of a wind turbine generator and includes the turbine, blades, and tower as well as related electrical equipment. This does not include wiring to connect the wind energy system to the grid. ***(08-10 Eff. November 3, 2008)***

WECS TOWER HEIGHT: ***(08-10 Eff. November 3, 2008)***

A. Horizontal Axis Wind Turbine Rotors: The distance between the ground and the highest point of the WECS, as measured from the ground, plus the length by which the rotor blade on a horizontal mounted WECS exceeds the structure which supports the rotor and blades;

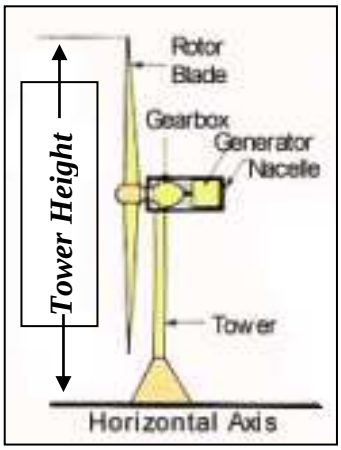

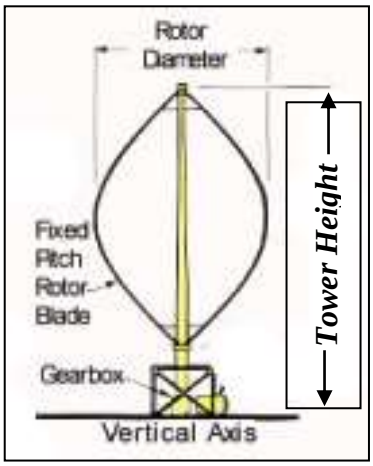

B. Vertical Axis Wind Turbine: The distance between the ground and the highest point of the WECS.

WIND SITE ASSESSMENT: An assessment to determine the wind speeds at a specific site and the feasibility of using that site for construction of a wind energy system. ***(08-10***

Eff. November 3, 2008)

SECTION 2.24 DEFINITIONS "X"

(Reserved for future use)

SECTION 2.25 DEFINITIONS "Y"

YARD: The open space of a lot unoccupied and unobstructed from the ground upward by the principal building and any accessory building except as otherwise provided in this ordinance. ***(09-01 Eff. August 3, 2009)***

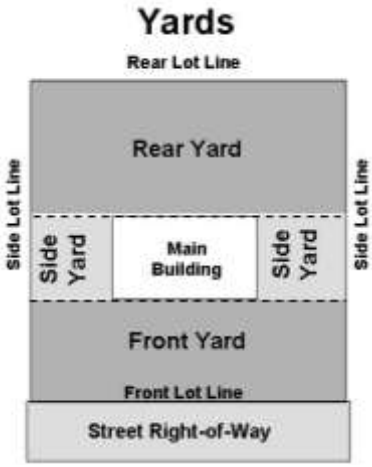

YARD FRONT: An open space across the full width of a lot extending into the lot from the front lot line to the nearest portion of the principal building. ***(09-01 Eff. August 3, 2009)***

YARD, REAR: An open space across the full width of a lot extending into the lot from the rear lot line to the nearest portion of the principal building. ***(09-01 Eff. August 3, 2009)***

YARD, SIDE: An open space between the front yard and rear yard extending into the lot from the side lot line to the nearest portion of the principal building. ***(09-01 Eff. August 3, 2009)***

YARD, REQUIRED: For front yards, that area between the front lot line and the required front setback. For side yards, that area between the side lot line and the required side setback. For rear yards, that area between the rear lot line and the required rear setback. ***(09-01 Eff. August 3, 2009)***

SECTION 2.26 DEFINITIONS "Z"

ZONING BOARD OF APPEALS: (Also known as board of appeals) This is the body which hears appeals on administrative decisions, variance requests, interprets the provisions of this ordinance and fulfills any other duties delegated to it by this or any other properly adopted ordinance in Isabella County in accord with the provisions of Act 110 of the Public Acts of 2006 of the Sate of Michigan, as amended.

ZONING ADMINISTRATOR: The person designated by the County Board of Commissioners to administer the provisions of this Zoning Ordinance. ***(08-09 Eff. October 25, 2008)***

ALL OTHER WORDS NOT DEFINED: All other words shall have the meaning as defined in the Webster's New World Dictionary, Second College Edition.

ARTICLE 3
GENERAL PROVISIONS

SECTION 3.01 ACCESS

Any lot created after the effective date of this Ordinance shall front upon and have its minimum width upon a public road, or private road meeting the requirements of Section 3.22. ***(07-01 Eff. May 15, 2007)***

SECTION 3.02 ACCESSORY BUILDINGS AND STRUCTURES *(16-05 Eff. August 1, 2016)*

A. General Provisions

1. An accessory building or structure may be constructed detached from the principal building or as an integral part of the principal building.

2. When constructed as part of the principal building, the accessory building or structure shall comply with all requirements applicable to the principal building.

3. An accessory building shall not be located nearer than six (6) feet from the principal building.

4. An accessory building or structure of two hundred (200) square feet or less in area shall be located a minimum of five (5) feet from the side and rear lot lines in all districts. In the case of a waterfront lot an accessory building or structure two hundred (200) square feet or less in area shall be located a minimum of five (5) feet from a side and front lot line.

5. Manufactured homes may not be used for storage or as an accessory use.

B. District regulations for permitted uses, size, and location

1. Agricultural Districts (AG-1, AG-2, and AG-3)

   a. Permitted accessory buildings and structure shall include customary farm structures, garages, utility sheds, platform decks, and other similar structures.

   b. Accessory buildings and structures shall comply with lot coverage and setback requirements of this ordinance.

c. Accessory buildings and structures may be constructed on a lot without a principal building.

2. Residential Districts (R-1, R-2, and L-R)

a. Permitted accessory buildings and structures shall include garages, utility sheds, platform decks, and other similar structures.

b. No accessory building or structure, or combination of buildings and structures, shall exceed ten (10%) percent of the lot area, provided the lot coverage and setback requirements of this ordinance are not exceeded.

c. No detached accessory building or structure shall exceed a building height of twenty (20) feet as defined by Article 2.

d. Accessory buildings and structures may not be constructed on a lot without a principal building, except in the case of the L-R Districts in which single accessory building of not more than eight hundred and sixty four (864) square feet may be constructed on a non-waterfront lot.

e. An accessory building or structure, or any part thereof, shall not be located in the front yard. This provision does not apply to waterfront lots.

f. For waterfront lots, accessory buildings and structures, may be permitted in the required rear yard outside of the ordinary high water mark provided the following conditions are met:

1. Stairways, stairway landings and deck paths no wider than five (5) feet may be permitted provided that such stairways, stairway landings and deck paths comply with all required side yard setbacks and other provisions of this ordinance.

a. Stairways, stairway landings and deck paths may include railings, however such railings shall not exceed thirty-eight (38) inches above the surface of said stairways, stairway landings or deck paths and shall not be more than fifty percent (50%) visually obscuring as viewed perpendicular to the railing from any side.

2. Pump houses or enclosures no larger than three (3) feet in length, three (3) feet in width and three (3) feet in height may be permitted provided that such pump houses or enclosures

comply with all required side yard setbacks and other provisions of this ordinance.

3. Platform decks may be permitted provided that such decks comply with all required side yard setbacks.

    a. Platform decks shall have a maximum area of three hundred (300) square feet.

    b. Platform decks shall be mounted on pillars or posts with a deck surface placed at an elevation of at least six (6) inches and not more than thirty six (36) inches above the mean grade beneath such deck.

    c. Platform decks shall not have a roof or other impervious surface.

    d. All areas beneath the platform deck surface shall be covered by appropriate soil erosion control measures to effectively control runoff.

4. Platform decks may include railings, however such railings shall not exceed thirty-eight (38) inches above the surface of said decks and shall not be more than fifty percent (50%) visually obscuring as viewed perpendicular to the railing from any side.

g. For waterfront lots, a single accessory building, may be permitted in the rear yard provided the following conditions are met:

1. The area and the height of the accessory building is determined by the distance of the principal building to the ordinary high water mark (see table below).

Principal Building Distance	Under 100 ft	Between 100 and 200 ft	Over 200 ft
Max. Area (sq ft)	100	240	400
Max. Height (ft)	10	10	12

2. Provided such building complies with all required setbacks and other provisions of this ordinance.

3. Commercial and Industrial Districts (C-1, C-2, and I-1)

   a. Permitted accessory buildings and structures shall comply with all dimensional requirements of this ordinance.

   b. All accessory buildings and structures located in the C-1, C-2, and I-1 districts shall each comply with Article 7 and 8 respectively.

SECTION 3.03 ANIMALS (KEEPING OF)

A. No livestock animals or fowl other than customary household pets may be housed in any residential district, except those specified in the R-1 District, or within 100 feet of any adjoining residential property line. The keeping of not more than four customary household pets may be permitted in all districts.

B. The keeping of more than four dogs, age 6 months or older may be permitted on any lot provided that all of the following conditions are met.

   1. The size of the lot in questions is at least 5 acres;

   2. The animals are housed at least 100 feet from any adjoining property line;

   3. A kennel permit is obtained from the office of the Isabella County Animal Control Department; and

   4. The keeping of dogs must be for personal use only and not for commercial purposes.

C. Predatory or wild animals shall not be kept in any district in the county.

SECTION 3.04 AREA OR SPACE REQURIED

No lot, or lots in common ownership and no court, parking area or other space shall be reduced to less than the minimum required under this ordinance. No lot or other area shall be further reduced if already less than the minimum. No portion of an existing lot of record shall be sold if the new lot which is created does not meet the area and dimension requirements of the district in which it is located.

SECTION 3.05 BASEMENT DWELLINGS

A. The use of any basement as a residence or dwelling unit is prohibited in all districts. This provision shall not exclude underground homes or similar dwelling units from locating in the county.

B. Basement dwellings intended for use and occupancy incidental to the construction of a permanent dwelling may be so used and occupied on any lot,

provided a temporary permit is secured from the zoning administrator upon compliance with such reasonable safety requirements as may be established and with sanitary regulations of the local Health Department. Such permit shall not be granted for any period longer than one year subject to renewal only upon evidence of reasonable progress toward completion in the construction of a permanent dwelling to be erected on the lot or land on which said basement home is placed. Special consideration may be given for renewal where undue circumstances (e.g. ill health, etc.) has halted construction. ***(08-09 Eff. October 25, 2008)***

SECTION 3.06 BORROW PITS (*93-04 Eff. June 19, 1993*)

Borrow Pits, as defined in Article 2 shall be allowed in AG-1, AG-2, AG-3 and I-1 Districts, provided a permit is obtained and the following conditions are met:

A. The permit shall require an application co-signed by the landowner and operator and submitted to the Zoning Administrator, a fee, and Site Plan which requires the following information: ***(08-09 Eff. October 25, 2008)***

1. A clear description of the proposed operation, the duration of the use, and the schedule for reclamation.

2. The location of existing buildings, driveways, roads, and uses on the Site and surrounding properties.

3. The location and description of service drives, haul roads, and processing equipment for the operation.

4. A plan describing any contemplated future use of the site.

B. No structures shall be erected.

C. No activity shall take place within 100 feet of a property line or 300 feet of a residence.

D. Truck operators shall be directed away from residences whenever practical.

E. Air pollution in the form of dust and dirt shall be kept to a minimum.

F. The operation shall be restricted to the period from sunrise to sunset.

G. Upon reclamation other banks of all excavations shall be sloped to the pit floor at a slope not steeper than 4 feet horizontal to 1 foot vertical.

H. Topsoil of a quality equal to that occurring naturally on like soils shall be replaced within the period of the permit to a depth of a minimum of 3 inches when settled.

I. Vegetation similar to that existing prior to the excavation shall be restored or seeding and planting to USDA Soil Conservation Service standards shall be performed to prevent erosion.

J. All extraction activities must operate under the Soil Erosion and Sedimentation Act and provide proof of the required permit.

K. A performance bond may be required by the Department of Resource Management.

L. No proposed Borrow Pit may be permitted within 1,000 feet of an existing Mineral Extraction Industry or Borrow Pit.

M. The permit shall be valid for a period of one year. All activities, including reclamation must be performed within the permitted period. The permit may be extended for up to 6 months for good cause upon written request. Subsequent activity at a reclaimed site shall require a Special Land Use Permit from the Planning Commission.

N. A copy of the permit must be conspicuously posted on the site of the activity.

SECTION 3.07 CORNER CLEARANCE

No fence, structure or plantings, except deciduous trees, over 3 feet in height shall be planted or erected on the street side of a line drawn between two points each being 30 feet from the intersection of the rights-of-way of two intersecting streets.

SECTION 3.08 CORNER LOT

Any yard which abuts a street right-of-way shall meet the front yard requirements of the district in which it is located. Corner lots have at least two (2) front lot lines and at least two (2) front yard setbacks. The other yards shall be considered side yards. ***(09-01 Eff. August 3, 2009)***

SECTION 3.09 DAMAGED BUIDLINGS

A. A building which has collapsed or been damaged by fire, flood, storm, or act of God to such an extent that the cost of repair and reconstruction exceeds 50 percent of its replacement value at the time the damage occurred shall be repaired, removed, or reconstructed by commencement within 90 days and completion within one year of the damaged and according to the provisions of this ordinance and the building code relative to new construction. ***(08-09 Eff. October 25, 2008)***

B. A building damaged by wear and tear, deterioration and/or depreciation to such an extent that the cost of repair and rehabilitation exceeds 50 percent of its replacement value shall be repaired, removed, or rehabilitated by commencement within 90 days and completion within on year of the date of notice given the Zoning Administrator, according to the provisions of this ordinance and the building code relative to new construction. ***(08-09 Eff. October 25, 2008)***

C. The Zoning Administrator may require that damaged buildings, as described in Section 3.09 (A) and (B) above, be secured at the doors and windows or that the building be removed. ***(08-09 Eff. October 25, 2008)***

D. A building permit must be secured before reconstruction of a building shall be commenced. The county building inspector shall determine the extent of such destruction, deterioration and depreciation before issuing a permit.

SECTION 3.10 DUMPSTER

All dumpsters located in any residential district shall not be located in any front yard and shall be properly fenced in or screened from view on three sides.

SECTION 3.11 DWELLING UNITS

All dwelling units located outside of a manufactured home community shall comply with the following conditions: ***(08-03 Eff. June 2, 2008)***

A. All dwelling units shall meet the requirements of the district in which it is located, including, dwelling area requirements and minimum dwelling width. ***(08-09 Eff. October 25, 2008)***

B. Minimum dwelling dimensions shall be determined as follows: ***(89-05 Eff. January 26, 1990)***

1. Dwelling Area: Dwelling area shall be computed using the habitable floor space enclosed by the structure's foundation, as measured from the foundation's exterior edges; excluding those foundation areas required for porches, breezeways, attached garages, and the like. The area for manufactured housing units shall be determined by the manufacturer's length and width designations for the unit.

2. Minimum Dwelling Width: The minimum dwelling width shall be measured from the foundation's exterior edge to the exterior edge of the opposite foundation wall. Breezeways, garages, porches, and other appurtenances shall not be considered part of the required minimum dwelling width.

3. Minimum Dwelling Areas and Minimum Dwelling Widths are as follows:

Zoning District	Min. Dwelling Area (sq. ft.)	Min. Dwelling Width
AG-1	720	14’
AG-2	720	14’
AG-3	720	14’
R-1	850	24’
R-2	720	14’
L-R	720	24’

C. All wheels, towing mechanisms, and tongues of manufactured homes shall be removed and none of the undercarriage shall be visible from outside the manufactured home. ***(08-03 Eff. June 2, 2008)***

D. Exterior building materials of all dwelling units shall extend to the foundation on all sides.

E. All dwelling shall be firmly attached to the foundation so as to be water tights as required by the building code adopted by the appropriate enforcement authority, or if a manufactured home, shall be anchored to the foundation by an anchor system designed and constructed in compliance with the United Sates Department of Housing and Urban Development (HUD) Regulations, entitled “Manufactured Home Construction and Safety Standards.”

F. All dwellings shall be connected to a public sewer system and water supply system and or a well or septic system approved by the local Health Department.

G. All dwellings shall be in compliance for provisions of ingress and egress with the building code adopted by the appropriate enforcement authority.

H. All manufactured homes must meet the standards for manufactured home construction as contained in the HUD regulations entitled, “Manufactured Home Construction and Safety Standards”, effective June 15, 1976, as amended. All other dwellings shall meet the requirements of the building code adopted by the appropriate enforcement authority.

SECTION 3.12 DWELLINGS ON MORE THAN ONE LOT

If a structure is to be located on a parcel of land containing two or more lots under single ownership, the entire parcel shall be considered a “lot” for purposes of this ordinance.

SECTION 3.13 ESSENTIAL PUBLIC SERVICES

It shall be lawful for public utilities, municipal departments or commissions to erect, construct, alter or maintain essential public services including buildings, reasonably necessary for the furnishing of adequate services for the public heath, safety and general welfare, in any zone, area or use district of the county; provided that the

erections or constriction of any or all above-grade construction consisting of necessary buildings and structures therefore shall be designed and erected to conform harmoniously with the general architecture and plan of such district in which it is to be erected and shall be subject to the approval of the board of appeals. The board of appeals hereby is granted the power to permit any public service corporation, contemplated in the foregoing paragraph, to erect and use a building or an addition to an existing building, or a structure for the aforesaid public utility purposes in any permitted district to a greater height or of a greater area than the district requirements herein established; and to permit the location in any use district of a public utility building or structure providing such board of appeals shall find such use, height, area, building or structure necessary for public convenience and service, provided that such public building, structure or use is designed, erected and landscaped to conform harmoniously with the general architecture and plan of such district and the advantage of the proposed location to the utility is not outweighed by the detriment to the locality and a different suitable location is not readily available.

SECTION 3.14 FENCES AND WALLS

A. Fences or walls of not more than 7 feet in height are permitted in all yards, except as provided herein. ***(89-05 Eff. January 26, 1990)***

B. Fences shall not be constructed within the required road right-of-way or across alleys which have not been vacated.

C. Fences in the R-1, R-2 and L-R Districts are as follows*:* ***(13-01 Eff. February 2, 2013)***

1) Protective wire such as barbed wire or electric fences shall not be utilized.

2) Fences no more than three feet (3') in height used for decorative purposes shall be permitted in the required front yard. Except as provided herein, fences no more than four feet (4') in height consisting of at least seventy-five percent (75%) open spaces uniformly distributed along its surface may be permitted in the required front yard.

3) For waterfront lots, fences no more than three feet (3') in height used for decorative purposes may be located in the required rear yard. Except as provided herein, fences no more than four feet (4') in height consisting of at least seventy-five percent (75%) of open spaces uniformly distributed along its surface may be located in the required rear yard. This provision only applies to waterfront lots.

4) A fence not more than seven feet (7') in height may be permitted in all yards along a property line which directly abuts a public park or public boat launch.

5) For safety purposes, no fence shall be constructed which obstructs the view of pedestrian or vehicular traffic on adjacent streets.

D. Fences in C-1, C-2, and I-1 Districts shall not exceed a height of eight feet. If required by the planning commission, screening shall be provided to protect adjacent property.

E. Walls and fences for screening purposes shall comply with Section 3.23.

SECTION 3.15 HEIGHT EXCEPTIONS

The following structural appurtenances shall be permitted to exceed the height limitations for authorized uses, as specified in the appropriate zoning district.

A. Appurtenances to mechanical or structural functions such as chimneys and smoke stacks, water tanks, ventilators and communication towers, PROVIDED that such appurtenances shall be approved by the zoning administrator ***(08-09 Eff. October 25, 2008)***.

B. Structures for agricultural operations, windmills, flag poles, church steeples, belfries, cupolas, domes and towers are permitted up to 100 feet, provided that any required yard setback shall be equal to the height of the structure.

SECTION 3.16 HOME OCCUPATIONS

Home occupations, as defined in Article 2, shall be allowed in all residential and agricultural districts provided that the following standards are met: ***(97-02 Eff. January 2, 1998)***

A. The use of the dwelling unit for the home occupation shall be clearly incidental and subordinate to its use for residential purposes by its occupants, and not more than 25 percent of the livable floor area of the dwelling unit shall be used in the conduct of the home occupation.

B. There shall be no change in the outside appearance of the building or premises, or other visible evidence of the conduct of such home occupation, except the outside storage of growing plants shall be allowed. ***(96-01 Eff. August 17, 1996)***

C. No home occupation shall be conducted in any accessory building in R-1, R-2, or L-R Districts, except for incidental storage.

D. In agricultural districts, a maximum of 50 percent of the livable floor area of the dwelling unit may be used for a home occupation in any single accessory building provided it is on the same parcel as the dwelling unit.

E. No traffic shall be generated by such home occupation in greater volume than would normally be expected in a residential neighborhood (up to 10 trips per day). Any need for parking generated by the conduct of such home occupation shall be met off the street and other than in a required front yard. No more than three off-street parking spaces may be permitted in R-1, R-2, and L-R Districts.

F. No equipment or process shall be used in such home occupation which creates noise, vibration, glare, fumes, odors, or electrical interference detectable to the normal senses off the premises, if the occupation is conducted in a single-family dwelling, or outside the dwelling unit if conducted in other than a single-family residence. In the case of electrical interference, no equipment or process shall be used which creates visual or audible interference in any radio or television receivers off the premises, or causes fluctuation in line voltage off the premises

G. No regular outside sales or service contacts shall be made between 8 p.m. and 8 a.m.

H. Home occupations such as, but not limited to, family child care centers, hair dressers, income tax preparation, accounting services, computer programming, telephone solicitation, arts and crafts sales, growing plant sales, insurance sales, medical, professional and other offices and hide processing and fur trading shall be permitted provided they meet allow of the above provisions.

I. Yard or garage sales are not considered home occupations and are provided for in Section 3.30.

J. The applicant registers the home occupation with the Zoning Administrator. A zoning permit shall be issued if all the standards of Section 3.16, and any other applicable standards of this Ordinance, are met. An annual inspection may be conducted to ensure compliance with the conditions specified in this section. ***(08-09 Eff. October 25, 2008)***

K. A zoning permit for a home occupation runs with the property, not with the owner, and a subsequent owner may continue to operate the home occupation provided that the new owner registers with the Zoning Administrator and operates the home occupation in conformance with all the requirements of this Ordinance and any permit issued pursuant to it. ***(08-09 Eff. October 25, 2008)***

L. If a home occupation ceases for more than one (1) year it may not be reestablished without re-registration and receipt of a zoning permit.

SECTION 3.17 MOVING OF STRUCTRURES

The moving of structures shall be considered the erection of new structures. All provisions relative to the erection of new structures shall be met. A performance bond may be required by the building inspector prior to such moving.

SECTION 3.18 NON-CONFORMING USES, STRUCTURES, LOTS AND SIGNS *(11-03 Eff. January 20, 2011)*

A. NONCONFORMING USES

Any lawful use existing at the time of the adoption or amendment of this ordinance may be continued notwithstanding the fact that such use becomes non-conforming under the ordinance as adopted or amended.

B. CHANGE OF NONCONFORMING USE

A nonconforming use may be changed to another nonconforming use by authorization of the zoning board of appeals if such new use would markedly decrease the degree of nonconformance and would enhance the desirability of adjacent conforming uses. Whenever a nonconforming use is changed to a more restricted or conforming use, such use shall not thereafter revert to the prior non-conforming use.

C. DISCONTINUANCE

If a nonconforming use is discontinued for a period of one year, it may not thereafter be continued. No nonconforming use, if changed to a use permitted in the district in which it is located, shall be resumed or changed back to a non-conforming use.

D. EXPANSION OF NONCONFORMING USES

A nonconforming use may be expanded throughout the structure in which it is conducted, except in all residential districts. Nonconforming uses which are not located within a building or structure may not be expanded to land not actually in use at the time of the adoption of this ordinance or any amendment thereto. Nonconforming uses having multiple buildings or structures shall not be expanded by construction or an additional building or structure.

E. NONCONFORMING STRUCTURES AND USES

Any structure or use which when constructed, complied with the height, area, dimension or any other size regulations of the ordinance in effect at the time of its construction may continue notwithstanding the fact that such structure or use becomes nonconforming as to height, area, dimension, or other regulations of this ordinance as adopted or amended.

F. BUILDINGS AND USES UNDER CONSTRUCTION

Any structure or use lawfully in the process of completion at the time of the adoption of this ordinance or any amendment thereto may be completed. Such structure may be used for the use specified in the building permit notwithstanding the fact that such use or the structure itself does not comply with the ordinance as adopted or amended. The term “Process of completion” includes the completed construction of footings and the pouring of concrete therefore. The preparation of architectural plans and drawings, purchase of land, leases, or materials, or the moving of earth are excluded from such term. The board of appeals shall determine which buildings and structures are in the process of completion according to the procedure specified in Article 14.

G. RESTORATION AND REPAIR

1. Only repairs and maintenance work required to keep a non-conforming structure in sound condition may be made.

2. A structure or use damaged by the elements, public enemy or other casualty may be rebuilt or restored to its size prior to such damaged and its use resumed if the cost of such restoration and repair does not exceed 50% of the appraised replacement cost of the building or use which was damaged. The county building inspector shall make such determination. Persons aggrieved by the determination of estimated replacement cost by the building inspector may appeal such determination to the Isabella County Construction Board of Appeals.

3. No nonconforming structure or use shall be rebuilt or reconstructed and resumed if the cost thereof exceeds the formula established in paragraph (2) unless the board of appeals has made the following determinations:

    a. The circumstances are such that the lot previously occupied by such non-conforming use cannot then be advantageously used for a use permitted in the district in which it is situated, and all repairs shall be commenced within one year from the time of the casualty. A building permit shall be first obtained.

    b. Reconstruction of the structure or use and its resumption will not adversely affect adjacent properties or the county for reasons of health, safety or general welfare.

H. DISTRICT BOUNDARY CHANGES

When district boundaries shall hereinafter be changed, any nonconforming use may be still continued but subject to all other provisions of this ordinance. The provisions of this article shall also apply to buildings and land or uses which hereafter become

nonconforming due to any reclassification of districts under this ordinance and any change in the regulations of this ordinance.

I. PLANS ALREADY FILED

In any case where plans and specifications for a building or structure have been field, which would conform with the zoning regulations effective at the date of such filing but not with the regulations of this ordinance, and where a building permit for such building or structure has been issued and construction work started at the effective date of this ordinance, such work my proceed provided construction is commenced within 60 days after the issuance of such permit and diligently pursued to completion.

J. NONCONFORMING LOTS

In any district in which single family dwellings are permitted, notwithstanding limitations imposed by other provisions of this Ordinance, a single family dwelling and customary accessory building(s) may be erected on any single lot of record recorded with the Register of Deeds at the effective date of adoption or amendment of this Ordinance. This provision shall apply even though such lot fails to meet the requirements for area or width, or both, that are generally applicable in the district; provided that setbacks and all other requirements not involving area or width, or both, of the lot, shall conform to the regulations for the district in which such lot is located. However, if two or more lots or combinations of lots and portions of lots with continuous frontage in single ownership are of record at the time of passage or amendment of this Ordinance, and if all or part of the lots do not meet the requirements established for lot width and area, the lands involved shall be considered to be an undivided parcel for the purposes of this Ordinance, and no portion of said parcel shall be used or divided in a manner which diminishes compliance with lot width and area requirements established by this Ordinance. ***(97-02 Eff. January 2, 1998)***

K. NONCONFORMING SIGNS

Nonconforming signs in use on the effective date of this ordinance shall be permitted to remain, provided they are properly maintained. Such maintenance is restricted to painting and minor repairs which cannot be considered a rebuilding of the sign.

Extensive repairs constituting rebuilding must meet the requirement of the pertinent zoning district. However, any existing sign so constructed, placed or illuminated as to constitute a safety or traffic hazard shall be corrected within 30 days of the effective date of this ordinance, or thereafter, within 30 days of written notice of the zoning administrator. ***(11-03 Eff. January 30, 2011)***

L. ILLEGAL NONCONFORMING USES

Nonconforming uses of structures or land existing at the effective date of this Ordinance that were established without a zoning permit or without a valid building permit or those

nonconforming uses which cannot be proved conclusively as existing prior to effective date of this Ordinance, are illegal nonconforming uses and are not entitled to the status and rights accorded legally established nonconforming uses. ***(97-02 Eff. January 2, 1998)***

M. PERMITS

Permits for construction on, expansion of, or substitution of nonconforming lots, uses or structures require a zoning permit. Other permits and approvals may also be required. ***(97-02 Eff. January 2, 1998)***

SECTION 3.19 ON SITE WIND ENERGY CONVERSION SYSTEMS (WECS) UP TO 66 FEET IN HEIGHT AND ANEMOMETER TOWERS UP TO 66 FEET IN HEIGHT *(08-10 Eff. November 3, 2008)*

A. On Site WECS up to 66 feet in height shall be approved by the Planning Commission through the site plan review process. In addition to the applicable information required by Article 11, the application shall include:

1. Location of overhead electrical transmission or distribution lines.

2. Location and height of all buildings, structures, towers, security fencing and other above ground structures associated with the on site WECS.

3. Location and height of all buildings, structures, and above ground utilities located within three hundred (300) feet of the proposed on site WECS. Specific distances to the other on site buildings, structures, and utilities shall also be provided.

4. Existing and proposed setbacks of all structures located on the property

5. Access road to the on site WECS with detail on dimensions, composition, and maintenance.

6. Planned security measures to prevent unauthorized trespass and access.

B. On Site WECS shall be setback from all property lines one (1) foot for every one (1) foot of tower height.

C. On Site WECS shall not be located within thirty (30) feet of an above ground utility line.

D. The minimum vertical blade tip clearance from grade shall be 20 feet for an On Site WECS employing a horizontal axis rotor.

E. On Site WECS shall comply with all applicable state construction and electrical codes and local building permit requirements. On Site WECS shall comply with Federal Aviation Administration requirements, the Michigan Airport Zoning Act (PA 23 of 1950), the Michigan Tall Structures Act (PA 259 of 1959) and any local jurisdiction airport overlay zone regulations.

F. On Site WECS shall comply with all applicable parts of the Michigan Natural Resources and Environmental Protection Act (Public 451 of 1994, as amended).

G. On Site WECS shall have automatic braking, governing, or a feathering system to prevent uncontrolled rotation or over speeding.

H. On Site WECS shall be grounded to protect against natural lightning strikes in conformance with the State Electrical Code.

I. On Site WECS shall not have affixed or attached any lights, reflectors, flashers or any other illumination, except for illumination devices required by Federal regulations. All required lighting shall be shielded to the extent possible to reduce glare and visibility from the ground.

J. If the On Site WECS tower is supported by guy wires, the wires shall be clearly visible to a height of at least six (6) feet above the guy wire anchors.

K. Noise emanating from the On Site WECS shall not exceed 55 dB(A) at the property line closest to the WECS. This sound pressure level may be exceeded during short term events such as utility outages and/or severe wind storms. If the ambient sound pressure level exceeds 55 dB(A), the standard shall be ambient dB(A) plus 5 dB(A).

L. The on site WECS shall be located and designed such that shadow flicker will not fall on, or in, any existing residential structure.

M. Color and surface treatment of the On Site WECS and supporting structures shall minimize disruption of the natural characteristics of the site. No lettering, company insignia, advertising or graphics shall be on any part of the tower, hub or blades of the WECS

SECTION 3.20 OUTDOOR LIGHTING

A. All outdoor lighting used to light a specific site shall be shielded to reduce glare and shall be so arranged as to reflect lights away from the adjacent residential districts or adjacent residences.

B. All outdoor lighting shall be directed toward and confined to the ground areas of the lawns or parking lots intended to be served.

C. All illumination of any outdoor features shall not be of a flashing, moving or intermittent type. Artificial light shall be stationary and constant in intensity and color at all times when in use.

SECTION 3.21 PRINCIPAL USE

Only one principal use shall be made of a lot (except upstairs apartments as provided in Section 7.03) unless groups of apartment buildings or commercial or industrial buildings shall be deemed a principal use collectively. A single-family dwelling, other than a farm dwelling, shall constitute a principal use and only one single-family dwelling shall be permitted on a lot, except as provided in Section 3.27(C)(6). ***(08-01 Eff. April 19, 2008)***

SECTION 3.22 PRIVATE ROADS *(07-01 Eff. May 15, 2007)*

A. Purpose

The County determines that it is in the best interest of the public health, safety, and welfare to regulate the construction, improvement, extension, relocation, maintenance and use of private roads. These provisions have been enacted to assure that private roads:

1. Will not be detrimental to the public health, safety, or general welfare.

2. Will not adversely affect the long term development policies of the County.

3. Will be designed and constructed with width, surface, and grade to assure safe passage and maneuverability of private vehicles, police, fire, ambulance, and other safety vehicles.

4. Will be constructed so as to protect against or minimize soil erosion and prevent damage to the lakes, streams, wetlands, and natural environment of the County.

5. Will be constructed of suitable materials to ensure minimum maintenance.

6. Will be adequately maintained

B. Private Road Review and Development Process

1. Private roads shall be approved by the Planning Commission through the site plan review process. In addition to the applicable information required by Article 11, private road applications shall include:

   a. A detailed written description of the development to be served by the private road.

b. Private roads serving more than three (3) lots shall include construction specifications with cross sections that show, at a minimum, precise location, grade, route, elevation, dimensions, and design of the private road.

c. Proposed future extensions of the private road within the development and to adjacent lands.

d. Location and distance to any public roads which the private road is to intersect.

e. A survey of the right-of-way by a registered land surveyor, together with surveys for each parcel to be served by the private road.

f. The location of all public and private utilities located within or twenty (20) feet from the edge of the proposed right-of-way.

2. The Planning Commission may require that the applicant comply with reasonable conditions relative to the design and construction of the private road including but not limited to:

a. An easement for future road extensions or connections to public roads.

b. Bump out for services at or near the public road.

c. Bump out for passing purposes if road length exceeds 1000 feet.

3. For private roads serving more than three (3) lots, the applicant(s), at the applicant(s)'s expense, shall provide the County with a set of "as built" drawings bearing a certificate and statement from a registered engineer certifying that the private road and the entrance has been completed in accordance with the requirements of the permit and the County Road Commission. The applicant(s) shall provide the County with private road certification form(s) signed and sealed by a Professional Engineer and Professional Surveyor or a Professional certified as both. The form(s) to be used shall be provided by the Zoning Administrator at the time of application.

4. For private roads serving less than four (4) lots, the property owner shall provide a signed sworn statement certifying that the private road has been constructed in accordance with the requirements of the Isabella County Zoning Ordinance. The form to be used shall be provided by the Zoning Administrator at the time of application.

5. For private roads serving less than four (4) lots, adequate ditching, drainage and culverts shall be provided so that the roadbed will not become saturated or that the natural flow of water will not be impeded.

6. For private roads serving more than three (3) lots, all ditching, drainage and culverts for drainage shall be reviewed by the County Drain Commission Office, at the applicant(s)'s expense.

7. The Zoning Administrator shall not issue a zoning permit for any residential unit or other structure on lots served by a private road until site plan approval for the private road has been granted by the Planning Commission. The private road shall be completed in accordance with the standards and requirements established in this ordinance prior to an occupancy permit being issued by the Building Official. Any use of a residential unit or other structure prior to completion of the private road shall be considered a violation of this ordinance.

8. Should a private road add a sufficient number of lots or parcels to change its status, it shall be treated as a new private road and shall be upgraded for its entire length to comply with all applicable requirements for private roads

C. Design Requirements

1. Design Standards for private roads, serving commercial and/or industrial zoned properties, shall meet the standards of the Isabella County Road Commission specifications, as contained in “Standards and Specifications for Plat Development/ Site Condominium Development and Street Construction”, for a Typical Rural Commercial-Uncurbed Road.

2. Design Standards for private roads serving residential uses shall meet the standards of the following table:

Lots Served	**1 - 3**	**4-12**	**over 12**
Right of Way width	44ft	66ft.	66ft.
Width of traveled surface (centered within ROW)	12ft.	22ft.	22ft.
Grade width	12 ft.	24 ft.	30ft.

Subbase	Constructed of soils and granulated materials of sufficient load bearing capabilities to support a loaded tandem axle truck weighing up to 46,000 lbs under normal conditions.	12 inches of 95% compacted MDOT Class II granular material, to extend full width across grade	12 inches of 95% compacted MDOT Class II granular material, to extend full width across grade
Base	Minimum, 4 inches of 98% compacted MDOT 23A aggregate	6 inches of 98% compacted MDOT 23A aggregate	6 inches of 98% compacted MDOT 22A aggregate
Surface	Base shall serve as surface	Base shall serve as surface	Bituminous mixture No. 13A, 2 ½ inches thick, 275 #/syd
Shoulder width	------	------	4ft. each side
Maximum length	------	------	------
Maximum grade	7%	7%	7%
Minimum drainage slope from center of traveled surface to edge of grade width	5%	5%	2.5%

NOTE 1: These standards do not apply to individual driveways. The design standards in this table are for private roads serving one (1) or more lots. Please see the definitions of private roads and driveways in Article 2.
NOTE 2: The design standards in this table do not necessarily meet the current Isabella County Road Commission standards for road construction.

3. The Planning Commission may, upon review of information provided by certifying engineer, increase or decrease the above standards. This includes possible use of a geotextile stabilization fabric where certain conditions warrant the use of such material.

4. The Planning commission may request review, by an independent engineer, on any request for deviation to the above standards. Costs for independent review will be passed on to the applicant.

5. The minimum distance between intersections of public and/or private road rights-of-way shall not be less than two-hundred (200) feet, as measured along the right-of-way line.

6. Any lot created with frontage on both a public road and private road shall take driveway access off the private road.

7. A series of dead-ends or cul-de-sacs are discouraged. Eyebrow, court, or stub roads are preferred. Reasonable accommodation shall be made for future road extensions and possible interconnections with adjacent properties.

8. All private roads**,** serving more than three (3) lots, which do not terminate at another public or private road right-of-way shall terminate with a cul-de-sac or tee turnaround. A cul-de-sac shall have a minimum external diameter of 140 feet and a tee turnaround shall have a minimum 82 foot long by 22 foot wide driving surface.

9. Applicable Isabella County Road Commission (ICRC) permit requirements shall be met for driveway and private road entrances to a public road.

10. The Planning Commission may allow the width of private roads to be reduced to 18 feet of traveled surface at points of significant topographic, wetlands, or other natural features.

11. Private road construction will preserve as much as practical, significant natural features such as mature trees, natural slopes, wetlands, and bodies of water.

12. Regulation Michigan State Highway stops signs shall be positioned and installed in accordance with the Michigan State Manual of Uniform Traffic Control Devices on all private roads.

13. All private roads shall have names approved in accordance with the Uniform House Numbering Ordinance. The developer and/or the property owners within the development served by the private road shall be responsible to erect and maintain road name signs at all intersections with both public and private roads. The design and location of the signs shall be the same as those used by the Isabella County Road Commission for similar purposes. Signs shall be marked as private.

14. All private roads servicing or intended to serve (2) or more lots, parcels or condominium units shall be under the control of an approved and recorded road maintenance agreement and deed restrictions which provide for the perpetual maintenance of such roads and/or easements to a necessary

and reasonable standard to serve the several interests involved. These documents shall be reviewed and approved by the County Planning Commission and shall contain the following provisions:

a. Method of initiating and financing of such road and/or easements in order to keep the road adequately maintained.

b. A workable method of apportioning the costs of maintenance and improvements.

c. That the owners of any and all of the property using the easement shall refrain from prohibiting, restricting, limiting or in any manner interfering with normal ingress and egress and use by any of the other owners. Normal ingress and egress and use shall include use by family, guests, invitees, tradesmen and others bound to or returning from any of the properties having a right to use the road. Provisions shall be included to allow ingress and egress of emergency and other public vehicles for whatever public services are necessary.

d. That the owners will permit planned future road tie-ins or extensions with appropriate cross-access agreements.

e. A notice that if repairs and maintenance are not made, the County Board may bring the road up to the design standards specified in this Ordinance and assess owners of parcels on the private road for the improvements, plus an administrative fee.

f. A notice that no public funds of the County or Township are to be used to build, repair or maintain the private road.

g. A statement such as, No private road shall be incorporated into the public road system unless it is constructed to the specifications of the Isabella County road Commission for all subbase, base and surface requirements. The property owners served by the private road shall be responsible for bringing the road up to those standards, if necessary.

SECTION 3.23 SCREEING PROVISIONS

All required screening referred to this section shall meet the following provisions.

A. Screening shall not extend into or be located within any portion of an existing street right-of-way.

B. Existing plant material, fences or walls may be counted as contributing to the screening requirement. Screening shall be provided on each lot or parcel independent of adjoining uses or adjoining vegetative matter.

C. Plant material other than ground cover (up to three feet in height) shall not be placed closer than four feet from the property line. Where plant materials are placed in two or more rows plantings shall be staggered in rows.

D. Evergreen trees shall be not less than three feet in height and shall be planted not more than 30 feet on centers.

E. Deciduous trees shall be not less than six feet in height and shall be planted not more than 30 feet on centers.

F. Deciduous shrubs shall be not les than three feet in height and shall be planted not more than four feet on centers.

G. The following landscape/plant materials are suggested for required screening:

1. Deciduous Trees: Ash, Beech, Birch, Flowering Crab, Ginkgo (male), Hackberry, Hard Maple, Hawthorn, Honeylocust, Linden, Magnolia, Redbud, Sycamore.

2. Evergreen Trees: Cedar, Fir, Hemlock, Juniper, Pine, Spruce.

3. Shrubs: Cotoneaster, Dogwood, Euonymus, Forsythia, Hazelnut, Honeysuckle, Hydrangea, Lilac, Privet, Russian Olive.

H. The following trees are not permitted for new plantings for required screening: Box Elder, Soft-maples (Red-Silver), Elms, Aspen, Cottonwood, willows, Horse Chestnut (nut bearing), Tree of Heaven, Catalpa, Female Ginkgo.

I. The planting shall be maintained in a neat and attractive manner commensurate with the adjoining area and shall maintain their density and screening effect throughout the calendar year.

J. Walls or fences for screening purpose shall be at least four feet in height, but in not case shall the fence or wall be lower than the installation, structure or activity to be screened, unless said installation, structure or activity exceeds eight feet in height.

K. If required by the planning commission, screening shall be provided along walls or fences to protect adjacent property.

L. All walls herein required shall be constructed of weather resistant, rust proof and easily maintained materials.

M. Masonry walls used for required screening purposes may be constructed with openings which do not in any square section (height and width) exceed 20 percent of the surface. Where walls are so pierced, the openings shall be spaced to maintain the obscuring minimum height requirement.

N. Wood walls may be permitted for screening under the following conditions:

1. All walls must be solid and appearance (no openings) and must be similar to 1 of the following wall types.

    a. Board

    b. Staggered Board

    c. Wood 1 inch x 4 inch screen

    d. Board and Batten

    e. Solid Stockade Fence

    f. Panel

    g. Solid Picket

2. Lumber shall be spruce, cedar, redwood or womanized or of equal construction quality or grade.

3. Grade of lumber shall be at least “construction grade.”

4. An anchor post set in concrete a minimum of 8” thick and 16” deep and 6” wider than the post (or other equivalent anchoring) shall be located at fence ends, corners and at approximately 20 foot centers for all types of wood screening fences.

O. Other appropriate screening that meets the equivalent of the standards specified in this Section may be allowed contingent upon approval of a sketch plan submitted to the planning commission.

SECTION 3.24 SOLAR PANELS, SATELLITE DISHES, ANTENNAS AND WIND GENERATORS

Free standing solar panels, satellite dishes, antennas and wind generators shall meet the setback requirements for accessory structures.

SECTION 3.25 SUBDIVISIONS OR LAND DIVISIONS

All subdivisions or land divisions developed under the Land Division Act (Act 591 of 1996 as amended) and all condominium subdivisions and condominium projects developed under the Condominium Act (Act 59 of 1978) in any district shall be processed according to the requirements of Article 13 Planned Unit Developments. ***(97-02 Eff. January 2, 1998)***

SECTION 3.26 SWIMMING POOLS *(14-05 Eff. September 15, 2014)*

Private swimming pools are permitted provided all of the following regulations are complied with:

A. Private pools, spas, hot tubs or other similar devices shall be equipped with filtration, circulation and other systems adequate to maintain the water in a clean and healthful condition in accordance with the health requirements of the county.

B. No private swimming pools, spas, hot tubs or other similar devices shall be wholly or partially emptied on another property, unless written permission is first obtained from the adjacent property owner.

C. Every person owning land on which there is located a swimming pool, spa, hot tub, or similar device (below ground or above ground) which contains twenty-four (24) inches or more of water in depth at any point, shall ensure that such device is made inaccessible to small children by means of a fence or enclosure surrounding the device or due to the height of the side walls, as approved by the Zoning Administrator. These side walls, fences or enclosures, including the gates, shall not be less than four (4) feet or greater than (6) feet above grade. All gates shall be self-latching with latches placed no less than four (4) feet above grade or otherwise made inaccessible from the outside to small children.

D. Swimming pools, spas, hot tubs and similar devices shall not be located less than ten (10) feet from any lot line and shall not be located in any required front yard. In residential districts the placement of private pools, spas, hot tubs or other similar device shall be limited to the side or rear yards.

E. No lighting or electrical wiring shall overhang the surface of the water or present the possibility of falling into the water. All lighting of private pools, spas, hot tubs or other similar devices or the surrounding area shall not reflect on adjacent property or buildings.

SECTION 3.27 TEMPORARY BUILDINGS AND USES *(08-01 Eff. April 19, 2008)*

A. No structure, whether temporary or permanent, of a fixed or portable construction, shall be erected or moved onto a lot and used for or stored for temporary purposes unless subject structure meets the minimum standards as

defined in this ordinance and is authorized by the issuance of a temporary permit by the zoning administrator as provided for in this section. ***(08-09 Eff. October 25, 2008)***

B. Administration of Temporary Buildings and Uses

1. All temporary buildings and uses shall meet the following requirements:

   a. Temporary dwellings must be self-contained for sewage disposal or a valid permit must be obtained form the Central Michigan District Health Department for the disposal of sewage.

   b. Setbacks shall be in accordance with the district in which the temporary permit is to be issued.

   c. Access to temporary permit site shall not encroach surrounding landowners.

   d. Temporary permits are nontransferable.

   e. Temporary permits shall terminate within the time specified on the permit.

   f. Unless otherwise required, the use of manufactured homes, when properly permitted for a temporary use, does not require skirting, pads, runners or piers, but must be temporarily anchored securely. ***(08-03 Eff. June 2, 2008)***

2. A written application for temporary permit shall include:

   a. Statement of the anticipated duration of said temporary use.

   b. Purpose of said temporary use.

   c. Written permission from landowner, if other than applicant.

C. The following temporary uses are permitted upon applying for and obtaining a valid temporary permit, as regulated herein, subject to all the special conditions associated with each temporary use and provided that any manufactured home is constructed to 1976 HUD specifications. ***(08-03 Eff. June 2, 2008)***

1. The use of a manufactured home as temporary living or working quarters within all agricultural districts and living quarters in all residential districts for up to 365 days while a dwelling or structure is being constructed on the same premises.

2. The use of a manufactured home as a temporary dwelling in all agricultural districts for a period up to 180 days for persons having short term or temporary employment within the county. Said approval shall only apply to the designated site and no manufactured home may be parked in a required front yard.

3. An individual recreational vehicle or manufactured home may be approved in agricultural and L-R Districts as a temporary dwelling for a period up to 90 consecutive days per calendar year for recreational purposes only. ***(89-05 Eff. January 26, 1990)***

4. A building in a new subdivision may be used as a sales and management office for the sale of dwellings within said subdivisions for a period of up to one year.

5. Temporary accessory structures for uses incidental to construction work may be authorized by permit by the zoning administrator after issuance of a building permit for the proposed structure, provided: ***(08-09 Eff. October 25, 2008)***

    a. The temporary permit shall specify the location of the temporary accessory structure.

    b. The temporary permit shall terminate six months after the date of its issuance. The zoning administrator may renew the permit for additional six-month periods if construction of the principal structure has been progressing in a reasonable manner. ***(08-09 Eff. October 25, 2008)***

    c. The temporary facility and all debris shall be removed within 15 calendar days after completion or abandonment of the work.

6. Accessory dwelling unit for infirm or ailing family members, provided:

    a. The lot is a minimum of one (1) acre.

    b. The accessory dwelling shall be located within two hundred (200) feet of the principal dwelling.

    c. Adequate provision for water supply and wastewater disposal shall be required and approved by the Central Michigan District Health Department.

    d. Accessory dwellings shall retain the appearance of a single family detached dwelling.

e. In the case where the accessory dwelling is a manufactured home, skirting shall be provided. No wheels or towing mechanisms shall be exposed.

f. The accessory dwelling unit shall provide adequate access for emergency vehicles.

g. The accessory dwelling unit shall meet all applicable construction codes for a dwelling.

h. An adequate driveway and one additional off-street parking space shall be provided for the accessory dwelling unit.

i. Separate sale or ownership of the accessory dwelling unit from the primary dwelling on a lot or parcel is prohibited.

j. The property owner shall reside in either the accessory dwelling unit or the principal dwelling unit.

k. When the accessory dwelling unit is no longer needed it shall be completely removed from the property.

l. The Zoning Administrator may impose any other reasonable conditions deemed necessary to protect adjoining properties and the public welfare.

m. The zoning permit for an accessory dwelling shall be renewed annually. Periodic checks of the septage disposal system may be required as part of the annual permit process.

7. Other similar noncontinuing uses that are temporary in nature as determined by the zoning administrator ***(08-09 Eff. October 25, 2008)***.

SECTION 3.28 VEHICLES

The storage or temporary parking of motor vehicles shall comply with the following regulations: ***(97-02 Eff. January 2, 1998)***

A. Storage or parking of two or more inoperable or unlicensed vehicles, boats, trailers or motorcycles (except operable farm equipment) in any district is expressly prohibited unless contained within an approved salvage yard or completely enclosed structure. ***(89-05 Eff. January 26, 1990)***

B. The parking or storage of vehicles over two tons in rated capacity or of ungaraged unlicensed vehicles in any residential district is prohibited.

C. Storage of recreational vehicles is permitted in agricultural and residential districts, if stored in the rear yard or side yard and locked so as to prevent access by children and to prevent any use except as permitted in Section 3.27.

SECTION 3.29 WASTE ACCUMULATION OF

The accumulation of waste, rubbish, garbage, refuse, trash; abandoned, discarded or unused objects, machinery or equipment such as furniture, stoves, refrigerators, freezers, cans or containers; or other deleterious substance on the premises of private residences or farms, commercial institutions and in the streets and alleys greatly increases the danger of fire and spread of infections, and diseases and is expressly prohibited by this ordinance, unless placed within a completely enclosed structure.

SECTION 3.30 YARD OR GARAGE SALES

Yard or garage shall be permitted up to two times per year provided the following conditions are met:

A. The yard or garage sale shall not operate for more than four days in any given month.

B. All signs advertising the sales shall not be displayed more than three days before the first day of the sale or more than one day after the final day of the sale.

SECTION 3.31 YARD REQUIREMENT EXCEPTIONS

The following exceptions to the yard requirements of this ordinance may be approved by the zoning administrator. ***(02-01 Eff. April 10, 2002)***

A. A lot of record that is nonconforming due to its area, width or both may have its front and side yard setback requirements modified up to 20%. Rear yard and/or waterfront setback requirements may not be modified.
(09-01 Eff. August 3, 2009)

B. The front, side, or rear yard requirements may be modified for an addition to an existing building, provided the new construction will not be closer to the lot line than the existing building and will have a minimum yard of not less than one-half the district requirements, provided:

1. The expansion of the building shall not exceed twenty-five percent (25%) of the square footage of the existing structure.

2. The expansion of the building will not bring the building closer to a waterfront than the required setback for that district.

C. Unenclosed accessory porches, decks, or ramps, roofed or unroofed, may project into an unmodified required yard a distance not to exceed eight(8) feet, provided: ***(09-01 Eff. August 3, 2009)***

1. The porch, deck, or ramp is no higher than one story and constructed on piers.

2. The porch, deck, or ramp shall have a minimum yard of not less than one-half of the district requirement.

3. The zoning administrator may approve only one such exception for each required yard. ***(08-09 Eff. October 25, 2008)***

4. The size of the porch, deck, or ramp shall not exceed twenty five percent (25%) of the square footage of the existing building.

5. The new construction will not be closer to a waterfront than the required setback for that district.

ARTICLE 4
DISTRICTS

SECTION 4.01 DISTRICTS

To carry out the purpose of this ordinance, Isabella County is hereby divided into the following districts:

"AG-1"	Restrictive Agricultural
"AG-2"	General Agricultural
"AG-3"	Agricultural Buffer
"R-1"	Low Density Residential
"R-2"	Medium Density Residential
"L-R"	Lakes Area Residential
"C-1"	General Commercial
"C-2"	Recreation Commercial
"I-1"	Light Industrial
"C-I"	Commercial- Industrial Planned Unit Development
"W-S"	Waterfront- Shoreland Overlay

SECTION 4.02 SCOPE OF REGULATIONS

Except as herein provided, no structure shall be erected or altered nor shall any building or premises be used for any purpose other than is permitted in the district in which such building or premises is located.

SECTION 4.03 PROVISION FOR OFFICIAL ZONING MAP

For the purpose of this ordinance, the zoning districts are provided herein are bound and defined as shown on a map entitled "Official Zoning Map of Isabella County." The official zoning map, with all explanatory matter thereon, is hereby made a part of this ordinance. The official zoning map shall be identified by the signature of the Isabella County Clerk and the chairman of the Isabella County Board of Commissioners.

SECTION 4.04 AUTHORITY OF OFFICIAL ZONING MAP

Regardless of the existence of purported copies of the official zoning map which may from time to time be made or published, the official zoning map, which shall be located in the office and open to public inspection, shall be the source of final authority as to the current zoning status of any land, parcel, lot, district, use, building or structure in the county.

SECTION 4.05 INTERPRETATION OF BOUNDARIES

Where uncertainty exists with respect to the boundaries of any of the districts indicated on the official zoning map, the following rules shall apply:

A. Where boundaries indicated as approximately following streets or highways, the center line of said roadways shall be construed to be such boundaries:

B. Where boundaries indicated as approximately following Municipal Boundary lines or following property or lot lines shall be construed as following said lines:

C. Where boundaries indicated as approximately parallel to the center lines of streets or highways shall be construed as being parallel thereto and at such distance there from as indicated by given distance or scaled dimension.

ARTICLE 5
AGRICULTURAL DISTRICTS

SECTION 5.01 DESCRIPTION AND PURPOSE RESTRICTIVE AGRICULTURAL DISTRICT (AG-1)

It is recognized that the public health and welfare of the citizens of Isabella County, the Sate of Michigan and the United States are greatly dependent upon the sustenance and economic benefits provided by a viable agriculture industry. This district is intended to ensure that land areas within the county which are well suited for production of food and fiber are retained for such production, unimpeded by the establishment of incompatible uses which would hinder farm operations and irretrievably deplete agricultural lands.

A. The Ag-1 District acknowledges that agriculture is a specialized form of industry characterized by the production through biological and botanical processes of saleable farm products as a result of the combination of raw materials (soils, seed, plants, water and nutrients), manpower (farm labor and machinery), and energy (solar and power equipment).

B. Other specific purposes for which this district is established include:

1. To preserve woodlands and wetlands associated with farms which, because of their natural physical features, are useful as water retention and groundwater recharge areas and as habitat for plant and animal life; and which have important aesthetic and scenic values which contribute to the unique character of the agricultural district.

2. To prevent the conversion of agricultural land to scattered nonfarm development which, when unregulated, unnecessarily increases the cost of public services to all citizens and results in the premature disinvestment in agriculture.

C. The agricultural district boundaries are based on an analysis of soils that identified those especially well suited for farming as classified by the U.S. Soil Conservations Service (based on the characteristics of soils, drainage, topography and the availability of water). Other factors were also taken into consideration when establishing the district boundaries, including the existing investment in agriculture, the extent of and proximity to nonfarm development, the average parcel size of existing farms and the minimum acreage needed for most farm operations. These factors are discussed in the 1986 Isabella County Comprehensive Plan.

D. The major agricultural soils in Isabella County as determined by the Isabella County Planning Commission from the Isabella County Soil Survey Manual (August 1985) are: ***(92-08 Eff. January 21, 1993)***

23B Ithaca Loam, 0-4% slopes
24 Ziegenfuss Loam
26A Metamora Fine Sandy Loam, 0-3% slopes
27 Corunna Sandy Loam
39A Londo Loam, 0-3% slopes
40 Parkhill Loam
71 Cohoctah Fine Sandy Loam

SECTION 5.02 DESCRIPTION AND PURPOSE GENERAL AGRICULTURAL DISTRICT (AG-2)

General Agricultural Districts are those open areas of the county where farming, dairying, forestry operations and other such rural-type activities exist and should be preserved or encouraged, and where woodlots, wetlands, wildlife and open space contribute to the natural beauty and diversity of the county. Accordingly, agricultural land, as well as large vacant areas, fallow land, wooded areas and wetlands are included. In addition, low density, residential dwellings are also permitted.

The mixture of agricultural uses and residential homes is intended to serve as a less intensive agricultural zone between the AG-1, Restrictive Agricultural District and the AG-3, Agricultural Buffer District.

SECTION 5.03 DESCRIPTION AND PURPOSE AGRICULTURAL BUFFER DISTRICT (AG-3)

This zoning district is intended for large lots or tracts of land in a rural setting. It is intended for agricultural, low density single family residential use, and other specialized uses requiring relatively large tracts of land. This restriction is necessary to prevent development from proceeding without planning. If development and subdividing are to occur, they shall be preceded by appropriate planning and rezoning.

SECTION 5.04 SPECIAL LAND USES

The following General Standards apply to all Special Land Uses in the Agricultural Districts:

A. The proposed use shall be sited upon lands which are less suitable for commercial agricultural than other agricultural lands within the district.

B. The proposed use shall be sited on a parcel in a manner which minimizes the amount of productive agricultural land which is converted to the proposed use.

C. The proposed use shall be located in close proximity to similar existing uses whenever possible and appropriate. The clustering of Special Land Uses into service centers shall be encouraged and accomplished by Special Land Use Permit.

SECTION 5.05 PERMITTED USES

The following abbreviations apply to the Table of Permitted Uses for the AG-1, Restrictive Agricultural District, AG-2, General Agricultural District, and AG-3, Agricultural Buffer District:

P: Permitted Use: Land and/or buildings in this District may be used for the purposes listed by right.

SLU: Special Land Use: The following uses may be permitted by obtaining Special Land Use approval when all applicable standards cited in Article 12 are met.

NP: Not Permitted: The use is not permitted in the District.

Table of Permitted Uses		AG-1	AG-2	AG-3
	Agricultural Labor Housing	SLU	SLU	SLU
	Airports (including private landing strips and crop dusting operations)	SLU	NP	NP
	Airports (public and private)	NP	SLU	SLU
	Auction Facilities ***(08-11 Eff. November 3, 2008)***	NP	SLU	SLU
	Bed and Breakfast Establishments. ***(01-03 Eff. November 16, 2001)***	SLU	SLU	SLU
	Borrow pits ***(93-04 Eff. June 19, 1993)***	P	P	P
	Cemeteries and customarily related uses (private or public) ***(08-02 Eff. April 19, 2008)***	SLU	SLU	SLU
	Centralized bulk collection, refinement, storage and distribution of farm products to wholesale and retail markets (such as grain cleaning and shelling)	P	P	NP
	Commercial agriculture, farm operations, and agricultural tourism (including farm markets, cider mills and wineries) ***(11-05 Eff. January 30, 2012)***	P	P	P
	Communication Towers and Antennas ***(01-02 Eff. October 4, 2001)***	SLU	SLU	SLU
	Confined feedlots and livestock housing facilities	SLU	SLU	NP
	Conservation area for fauna, flora ***(92-08 Eff. January 21, 1993)***	NP	P	NP
	Country clubs and golf courses	NP	SLU	SLU
	Excavation-Transportation Services ***(92-08 Eff. January 21, 1993)***	SLU	SLU	NP
	Facilities used in the research and testing of farm products and techniques	P	P	NP
	Family Child Care Homes ***(08-05 Eff. June 2, 2008)***	P	P	P
	Farm dwellings ***(89-05 Eff. January 26, 1990)***	P	P	NP
	Farm equipment sales, service and repair	P	P	NP
	Filling stations and convenience centers	NP	SLU	SLU
	Fisheries and hatcheries ***(92-08 Eff. January 21, 1993)***	NP	P	NP
	Forest preserve ***(92-08 Eff. January 21, 1993)***	NP	P	NP
	Fuel storage facilities	NP	SLU	NP
	Game refuge ***(92-08 Eff. January 21, 1993)***	NP	P	NP
	Group Child Care Homes ***(08-05 Eff. June 2, 2008)***	SLU	SLU	SLU
	Home occupations (see Section 3.16) ***(89-05 Eff. January 26, 1990)***	P	P	P
	Kennels	NP	SLU	NP
	Milling and processing of farm products	P	P	NP
	Miniature golf and golf driving ranges ***(94-03 Eff. January 31, 1995)***	NP	NP	SLU

	Table of Permitted Uses	AG-1	AG-2	AG-3
	Mineral extraction industries	NP	SLU	NP
	Manufactured home communities ***(08-03 Eff. June 2, 2008)***	NP	NP	SLU
	Motor vehicle repair facilities ***(89-05 Eff. January 26, 1990)***	NP	SLU	SLU
	Non-farm Dwellings (In AG-1, see Section 5.09. In AG-2, see Section 5.10). ***(92-08 Eff. January 21, 1993)***	P	P	P
	Nursing homes	NP	NP	SLU
	Nursery (including landscaping services and Christmas trees)	P	P	NP
	On Site WECS up to 66 feet in height and Anemometer Towers up to 66 feet in height ***(08-10 Eff. November 3, 2008)***	P	P	P
	Outdoor recreational facilities	NP	SLU	SLU
	Planned Unit Developments ***(92-08 Eff. January 21, 1993)***	SLU	SLU	SLU
	Private Indoor Entertainment Facilities (such as family type functions, funeral dinners, weddings, reunions, and other similar activities), Fraternal Organizations and Lodge Halls ***(99-03 Eff. September 11, 1999)***	NP	SLU	NP
	Public and institutional uses	SLU	SLU	SLU
	Recycling Drop-off Sites ***(92-08 Eff. January 21, 1993)***	SLU	SLU	SLU
	Rural Production and Processing Facilities ***(02-05 Eff. February 11, 2003)***	SLU	SLU	SLU
	Salvage yards	NP	SLU	NP
	Septage Waste Storage Facilities ***(10-02 Eff. August 2, 2010)***	SLU	SLU	NP
	Solid waste disposal areas (must meet state standards)	NP	SLU	NP
	Sorting, grading and packaging of fruits and vegetables for grower	P	P	NP
	State licensed residential facilities (6 or fewer residents) ***(89-05 Eff. January 26, 1990)***	P	P	P
	State Licensed Residential Facilities (more than 6 residents). ***(98-01 Eff. November 28, 1998)***	SLU	SLU	SLU
	Storage and sale of seed, feed, fertilizer and other products essential to agricultural production	P	P	NP
	Utility Grid WECS, On Site WECS over 66 feet in height, and Anemometer Towers over 66 feet in height ***(08-10 Eff. November 3, 2008)***	SLU	SLU	SLU
	Veterinary Services	P	P	NP

SECTION 5.06 SCHEDULE OF DISTRICT REGULATIONS *(02-04 Eff. May 1, 2002)*

Requirement		AG-1	AG-2	AG-3
	Min. Lot Area (sq ft)	43,560(B)	43,560(B)	43,560
	Max. Lot Depth (ft)	400(C)	(C)	-
	Min. Lot Width (ft) (A)	165	165	165
	Min. Front Yard (ft)	50	50	50
	Min. Total Side Yard (ft)	40	40	40
	Min. Least One Side Yard (ft)	20	20	20
	Min. Rear Yard (ft)	35	35	35
	Max. Height (ft)	35(D)	35(D)	35(D)
	Max. Lot Coverage (%)	10	10	30
	Min. Dwelling Area (sq ft)	720	720	720
	Min. Dwelling Width (ft)	14	14	14

A. Lot width shall be measured at the front building line. For lots with irregular shapes, the minimum horizontal distance between two side lot lines shall not be less than 75 percent of the minimum lot width. Where lot frontage is on the inside of a curve, a cul-de-sac, or similar condition, the width shall be determined as the average of the total of the front and rear lot lines. ***(92-08 Eff. January 21, 1993)***

B. For lots created after the effective date of this amendment the maximum lot size for non-farm dwellings is 3 acres when the original lot is comprised of 75% or more of the Identified Major Agricultural Soils [see Section 5.01 (D)], except in the instance where there are existing structures, the lot size may exceed 3 acres but no more than the minimum setback requirements for all existing structures. ***(16-01 Eff. February 16, 2016)***

C. Lots restricted by footnote (B) above shall have a maximum lot depth of 400', except in the instance where there are existing structures, the lot depth may exceed 400' but no more than the minimum setback requirements for all existing structures. ***(16-01 Eff. February 16, 2016)***

D. Farm buildings or structures may not exceed a height of 100 feet in AG-1, AG-2 and AG-3 Districts, provided they are set back from the lot line a distance equal to the height of the building or structure.

SECTION 5.07 SITE DEVELOPMENT STANDARDS

The use of land and structures within the Agricultural Districts shall seek to maximize agricultural productivity and shall meet the dimensional requirements specified in Section 5.06.

SECTION 5.08 ADDITIONAL REQUIRMENTS

A. No livestock manure or contaminated animal bedding shall be permitted to be stored or stockpiled within 1,000 feet of an existing neighboring residential dwelling, nor within 300 feet of any property line.

B. Soils shall be suitable for a septic drain field. Adequate area shall be maintained between the well and septic tank drain field as required by the County Health Department.

C. The driveway serving the lot must be a minimum of 100 feet from an intersection.

D. All farm buildings and accessory structures shall be sited at least 60 feet from the lot lines when adjoining a residential district or a minimum of 300 feet from an existing neighboring residential dwelling.

E. Roadside stands may be allowed that sell only products grown or produced on that farm. Such activity must provide access to an off-street parking area on the property of three parking spaces for each 50 square feet of gross floor area and/or display area, with a minimum of 540 square feet of parking area. Parking requirements do not need to conform to parking standards in Section 5.11.

SECTION 5.09 IMPLEMENTATION FOR SUBDIVIDING RESTRICTIVE AGRICULTURAL DISTRICT (AG-1) *(92-08 Eff. January 21, 1993)*

A. Land may be divided as authorized by the Michigan Land Division Act of 1967 (PA 288 of 1967) as amended, provided the newly created lots meet the size restrictions of Section 5.06. ***(11-04 Eff. January 30, 2012)***

B. Lots greater than 20 acres comprised of 75% or more of the Identified Major Agricultural Soils [see Section 5.01 (D)]:

1. For lots created after the effective date of this amendment (January 21, 1993) the maximum lot size for non-farm dwellings is 3 acres. ***(11-04 January 30, 2012)***

C. All non-farm building and zoning applicants in the AG-1 District should be aware of the Right to Farm Act (Public Act 240 of 1987) and the status of proposed road construction and development for the area.

SECTION 5.10 IMPLEMENTATION FOR SUBDIVIDING GENERAL AGRICULTURAL DISTRICT (AG-2) *(92-08 Eff. January 21, 1993)*

A. Land may be divided as authorized by the Michigan Land Division Act of 1967 (PA 288 of 1967) as amended, provided the newly created lots meet the size restrictions of Section 5.06. ***(11-04 Eff. January 30, 2012)***

B. Lots greater than 40 acres comprised of 75% or more of the Identified Major Agricultural Soils [see Section 5.01 (D)]:

1. For lots created after the effective date of this amendment (January 21, 1993) the maximum lot size for non-farm dwellings is 3 acres. ***(11-04 Eff. January 30, 2012)***

C. All non-farm building and zoning applicants in the AG-1 District should be aware of the Right to Farm Act (Public Act 240 of 1987) and the status of proposed road construction and development for the area.

SECTION 5.11 OFF-STREET PARKING AND LOADING

A. SCOPE

In all zoning districts, off-street parking facilities for the parking of self-propelled motor vehicles for the use of occupants, employees and patrons of the buildings hereafter erected, altered or extended after the effective date of this ordinance, shall be provided as herein prescribed.

B. MEASUREMENT UNITS

For the purpose of determining the off-street parking and loading facilities required as accessory to a use, definitions and standards are established as follows:

1. Off-street Parking Area: An open or enclosed area directly accessible from a public or private street for parking of automobiles of owners, occupants, employees, customers or tenants of the main use. Each space shall be directly accessible from a drive or aisle.

2. Usable Floor Area (UFA): Used in determining parking requirements, usable floor area shall mean the total area of all the floors of the building used by the principal activities as specified in the Parking Schedule, measured from the exterior faces of the building. The areas used for storage, mechanical equipment, stairwells or otherwise not occupied by people shall be excluded from the floor area calculation.

3. Gross Floor Area (GFA): Used in determining loading requirements, gross floor area means the total floor area used for the main and accessory activities and storage areas of the building served.

4. Seating Capacity: The number of seating units installed or indicated on plans for places of assembly; where not indicated on plans, it shall be assumed that a seating unit will occupy six square feet of floor area exclusive of all aisles; where benches, pews or other similar seating is provided, each 20 inches of such seating shall be counted as one seat.

5. Employees: Wherever the parking requirements are based on employees, it shall mean the maximum number of employees on duty on the premises at one time or on any two successive shifts, whichever is the greater.

6. Off-street Loading Space. An open space or enclosed area as part of a building directly accessible to a public street and available whenever needed for the loading or unloading of goods and products to the main use.

C. REQUIRED PARKING FACILITIES

The zoning administrator shall determine the minimum number of spaces required for accessory off-street parking by applying the schedule of parking requirements for the various uses and any other applicable provisions of this ordinance. Where the computation results in a fractional space, it shall be counted as one additional space required. The planning commission may vary the parking requirements of this article where it finds that due to the nature of the particular use, said requirements will not be adequate to provide sufficient parking or where the strict application of the requirements will result in an excess amount of parking related to the particular use. ***(08-09 Eff. October 25, 2008)***

D. SCHEDULE OF PARKING REQUIREMENTS

The number of off-street parking spaces required by type of use shall be determined in accordance with the following schedule.

Use	Parking Requirement Spaces per unit of measurement
Residential	
One and two family dwellings	2 Per dwelling unit
Multiple family, townhouses, Manufactured homes ***(08-03 Eff. June 2, 2008)***	2 Per dwelling unit
Bed and breakfasts	1 Per rented room plus 2 for resident family
Fraternities, Sororities	1 Per each bed

Use	Parking Requirement Spaces per unit of measurement
Institutional	
Child care center, day nurseries, nursery schools	1 Per 400 sq. ft. UFA plus 1 Per each employee
Churches	1 Per four (4) seats
Schools	1 Per teacher plus 1 Per employee plus 1 Per each four (4) high School students
Libraries, museums, public office buildings, post offices	1 Per 800 sq. ft. UFA plus 1 Per each two (2) employees
Private clubs or lodges	1 Per three (3) members allowed by law
Public golf courses	6 Per hole plus 1 Per employee
Private golf, tennis swim clubs	1 Per two (2) member families or individual membership
Theaters, auditoriums, assembly halls	1 Per four (4) seats
Hospitals and nursing homes	1 Per each four (4) beds plus 1 Per each staff doctor plus 1 Per each two (2) employees
Public outdoor recreation facilities	1 Per each four (4) seats or eight (8) feet of benches plus 10 Per each one (1) acre of undesignated area
Businesses	
Animal hospitals and kennels	1 Per each 400 sq. ft. UFA plus 1 Per each two (2) employees
Auto salesrooms, and automobile service garages	1 Per each 200 sq. ft. UFA plus 1 Per each service stall
Automobile wash establishments	4 Per each unit (computed by dividing the line dimension of the operation by 20; for in-line waiting lanes) plus 1 Per each Employee
Beauty or barber shops	1 Per each three (3) beauty or barber chairs plus 1 Per each employee
Bowling alleys	5 Per bowling lane
Dance halls, exhibition halls, pool halls, and assembly halls without fixed seats	1 Per each two (2) persons within the maximum occupancy load
Drive-in restaurants or similar drive-in uses for of food, beverages or refreshments	1 Per each 50 sq. ft. UFA (for in-line waiting lanes), plus 1 Per each three (3) employees, with a minimum total of 20 parking spaces

Use	Parking Requirement Spaces per unit of measurement
Furniture, appliances and household equipment, repair shops, hardware stores and other similar uses	1 Per each 800 sq. ft. UFA plus 1 Per each two (2) employees
Laundromats, coin operated dry cleaning establishment	1 Per each three (3) washing machines
Miniature or "Par 3" golf courses	3 Per each hole plus 1 Per each employee
Mortuary establishments	1 Per each 25 sq. ft. assembly room
Motels and hotels	1 Per each guest bedroom, plus 1 Per each employee
Restaurants and other establishments (other than drive-in restaurants) in which is conducted the sale and consumption on the premises of food, beverages or refreshments	1 Per each 75 sq. ft. UFA plus 1 Per each three (3) bar seats
Retail stores, mixed commercial uses or personal service establishments, except as otherwise specified herein	1 Per each 200 sq. ft. UFA
Offices	
Banks (other than drive-in banks) and business and professional offices	1 Per each 100 sq. ft. UFA
Drive-in banks	3 Per each teller window (in-line waiting lanes) plus 1 Per each employee
Medical clinics and dental clinics	3 Per each staff or visiting doctor plus 1 Per each employee
Industry	
Industrial or manufacturing establishments, research establishments, warehouses and storage buildings	1 Per each two (2) employees (or) 1 Per each 1,500 sq. ft. GFA (whichever is greater)

E. PARKING AND DRIVEWAY PLANS

Any person desiring to establish or change a driveway or parking area, except for farming or residential purposes, shall submit plans to the zoning administrator showing the location size, shape, design, landscaping, surface marking, lighting, drainage, curb cuts, entrances, exits and any other features of the driveways and parking lot. Plans shall be approved by the county planning commission who may request the advice and comment of the county engineer. All nonresidential and multiple family dwelling parking areas and driveways shall be designed to: ***(08-09 Eff. October 25, 2008)***

1. Provide convenient and safe automobile circulation and parking in relation to streets, pedestrian walkways and adjoining properties or parking areas.

2. Insure adequate visual sight distances.

3. Minimize conflicts of traffic movements on public streets.

4. Insure the safety, convenience and well being of adjoining property owners and the public.

F. PLANS FILED

All approved plot or development plans for parking areas shall be signed and kept on file by the zoning administrator ***(08-09 Eff. October 25, 2008)***.

G. LOCATION OF PARKINGS

In residential districts, all required parking areas shall be provided on the same lot with the principal use. In C-1 or C-2 Districts required parking shall be provided within 300 feet walking distance of the principal building and within 500 feet of the principal building in I-1 Districts. The planning commission may have the discretion to waive or amend this requirement in special circumstances.

H. COMMUNITY PARKING

Where a property owner participates or has participated in the cost of a public area, it shall be stated on plans as required by Section 5.11(E).

I. MINIMUM STANDARDS

Every off street parking, loading or driveway area hereafter enlarged, altered or constructed, shall be developed and maintained in accordance with the following.

1. Surfacing. These areas shall be surfaced with durable material and graded and drained to dispose of all surface water to the nearest storm drain or street or as required by the county engineer. Acceptable materials are asphalt and concrete.

2. Driveways. Driveways in commercial or industrial districts shall be no closer than 20 feet to a property zoned or used for residential purpose.

3. Parking in Front Yard. Off-street parking areas in commercial or industrial districts shall be permitted to occupy a portion of the required front yard, provided that there shall be maintained a landscaped area of 10 feet between the parking area and the road right-of-way.

4. Screening. All driveway and parking areas in commercial or industrial districts shall be effectively screened from any property zoned or used for residential purposes in accordance with Section 3.23.

5. Curbing: Curbing or similar physical barriers shall be provided at the edges of all parking areas to protect required yards and pedestrians.

6. Lighting: Lighting shall be reflected down and away from any residential property or public street.

7. Area: The minimum area of a parking space shall be 180 square feet except that such space shall be at least 250 square feet for spaces required for handicapped parking.

8. Landscaping: All parking areas containing 20 or more parking spaces shall have a minimum of 10% of the surface area landscaped as required by the planning commission.

J. JOINT USE OF PARKING FACILITIES

1. The joint use of parking facilities by two or more uses is encouraged whenever practical and satisfactory to each of the uses to be served. A reduction of individual parking requirements may be permitted by the planning commission in cases where neighboring uses have significantly different hours of operation from each other. However, each use shall provide a minimum of 50% of its individual off-street parking requirements.

2. Prior to approving any request for joint use of parking facilities, the planning commission shall consider:

   a. the location, number and spacing of driveways;

   b. the use of landscaping to soften the visual impact of the parking lot;

   c. internal circulation patterns and access to all participating uses; and

   d. potential conflicts among users and changes in parking demand.

3. The planning commission may require, as a condition of approval, a copy of an agreement among participants to share parking facilities. Such agreement shall specify the time period for which such arrangement is agreed to.

K. OFF-STREET LOADING REQUIREMENTS

On the same premises with every building or part thereof, erected and occupied for manufacturing, storage, warehouse, good display, department store, wholesale, market, hospital, laundry, dry cleaning or other uses similarly involving the receipt or distribution of vehicles, material or merchandise, there shall be provided and maintained on the lot adequate space for standing, loading and unloading services in order to avoid undue

interference with street or parking areas. In C-1, C-2 and I-1 Districts, such space shall be provided for any new building hereafter erected or enlarged, regardless of the intended use.

1. Such loading and unloading space, shall be at least 12 feet in width, 50 feet in length and accessible from a street, alley or private drive.

2. Such spaces shall be provided according to the following schedule:

Gross Floor Area in Square Feet	Loading and Unloading Spaces Required
0-10,000	One space
Each additional 20,000	One additional space

3. Off-street loading space area shall not be construed as, or counted towards, the supplying of area required as off-street parking space area.

SECTION 5.12 SIGNS *(11-03 Eff. January 30, 2012)*

A. The following signs are permitted in all Agricultural Districts and require a zoning permit prior to installation:

1. One (1) externally illuminated entranceway monument sign up to eighteen (18) square feet is permitted for residential developments. One sign for each major public road frontage may be provided. Sign(s) shall be placed no closer than ten (10) feet to any lot line and shall not exceed eight (8) feet in height.

2. One (1) freestanding sign of up to twenty four (24) square feet for lawful institutional uses such as churches, schools and parks. Sign shall be placed no closer than ten (10) feet to any lot line and shall not exceed eight (8) feet in height. One (1) wall sign of up to twenty four (24) square feet may also be permitted.

3. One (1) non-illuminated wall sign of up to twelve (12) square feet for family and group child care homes and home occupations. For homes setback more than fifty (50) feet from the road, one (1) non-illuminated freestanding sign of up to twelve (12) square feet and not exceeding six (6) feet in height may be substituted for wall sign provided the sign is placed no closer than ten (10) feet to any lot line.

4. One (1) externally illuminated freestanding sign of up to twenty four (24) square feet may be permitted for all other authorized uses, unless otherwise regulated in this ordinance. Sign shall be placed no closer than ten (10) feet to any lot line and shall not exceed eight (8) feet in height.

One (1) externally illuminated wall sign of up to twenty four (24) square feet may also be permitted.

5. One (1) non-illuminated off premise sign of up to twenty four (24) square feet may be permitted. Sign(s) shall be placed no closer than ten (10) feet to any lot line and shall not exceed eight (8) feet in height.

6. One (1) billboard structure is permitted and regulated as follows:

   a. Billboard structure must be located within 150' of the right of way of US-127.

   b. No billboard shall be located within 250' of a property line of an adjacent residential district or use.

   c. Billboard structure may contain one billboard facing each direction of traffic and the maximum size of each billboard shall be 300 square feet.

   d. Maximum height of a billboard shall be 35 feet above average grade.

   e. Billboard structure shall not be permitted adjacent to or within 500 feet of an interchange. The 500 feet shall be measured from the point of beginning or ending of pavement widening at the exit from, or entrance to, the main-traveled way.

   f. No billboard shall be constructed or erected on a lot so as to obstruct the view of adjacent buildings or signs.

   g. No billboard shall be constructed to obstruct the clear vision area of a road or intersection that results in a traffic hazard or interferes with the safe ingress and egress of a parcel.

   h. Billboards shall meet all building setback requirements for the district in which they are located.

   i. Billboards adjacent to a State Highway may be illuminated meeting the requirements of the Highway Advertising Act, PA 106 of 1972 as amended. All other billboards shall not be illuminated.

B. The following signs do not require a zoning permit:

1. On-site political campaign signs, provided they are removed within 10 days after the election to which they pertain.

2. Non-illuminated Real Estate signs of up to eight (8) square feet, provided they are removed within 10 days after consummation of lease or sale of property.

3. Non-illuminated trespassing, safety, directional, caution or announcement signs each not exceeding two (2) square feet in area or signs announcing the sale of produce each not exceeding six (6) square feet in area.

4. Name plates.

5. Signs that have been approved in conjunction with a valid zoning permit for any principal use as detailed in a plot plan or site plan.

6. Road name signs and other signs established by state, county, or township units of government when necessary for giving proper directions or otherwise safeguarding the public in any district.

7. Non-advertising signs erected by any organization, person, firm, or corporation that are needed to warn the public of dangerous conditions and unusual hazards including: caving ground, drop-offs, high voltage, fire danger, explosives, severe visibility limits, etc., in any districts.

C. The following signs are prohibited:

1. A sign resembling the flashing lights customarily used in traffic signals, or police, fire, ambulance, or rescue vehicle or signs which imitate official traffic directional signs or devices.

2. Illuminated signs where the source of light is directed in a manner where light is shining directly onto traffic or neighboring properties.

3. A sign using the words, “Stop”, “Danger”, or any other words, phrases, symbols, or characters, in such a manner as to interfere with, mislead, or confuse a vehicle driver.

4. Signs on parked vehicles where the sign is the primary use of the vehicle.

5. Signs greater than two (2) square feet that are affixed to trees, shrubs or similar natural features.

6. Signs affixed to fences or utility poles or structural elements not capable of supporting such signs.

7. Any sign which obstructs the ingress or egress from a required door, window, or other required exit.

8. Signs and advertising devices including banners, balloons, flags, pennants, pinwheels, searchlights, inflatable devices or any other sign or device with similar characteristics, except when used temporarily for periods not to exceed thirty (30) days within any six (6) month period.

9. Signs containing words, lettering, silhouettes, drawings or pictorial representation that are of a sexual explicit nature.

10. Signs placed within the road right-of-way.

11. Signs that obstruct the clear vision area of a road that results in a traffic hazard or interferes with the safe ingress and egress of a parcel.

12. Electronic message boards, except those which display only the date, time, temperature or the price of a product sold on the property.

13. Signs containing flashing, intermittent or moving lights.

14. Signs with moving or revolving parts.

15. Wall signs that project above the roof line or cornice

D. Signs which no longer advertise an existing business or service establishment must be removed by the owner within 30 days after written notification from the Zoning Administrator.

ARTICLE 6
RESIDENTIAL DISTRICTS

SECTION 6.01 DESCRIPTION AND PURPOSE LOW-DENSITY RESIDENTIAL DISTRICT (R-1)

This District provides for a desirable residential area for single family dwellings. The Low Density Residential District would not normally have public sewer or public water.

SECTION 6.02 DESCRIPTION AND PURPOSE MEDIUM DENSITY RESIDENTIAL DISTRICT (R-2)

The Medium Density Residential District is intended for single and two-family dwellings. The district shall be located in those areas with the greatest likelihood of access to public sewer and/or public water service, and is within or adjacent to a community.

SECTION 6.03 DESCRIPTION AND PURPOSE LAKES AREA RESIDENTIAL DISTRICT (L-R)

The Lakes Area Residential District is intended primarily for single-family residential development. The purpose of this District is to provide for a stable and sound residential environment on lots of sufficient size to accommodate the safe and healthful use of on-site water and waste disposal systems. The intent of this district is to encourage the proper use of lands adjacent to the lakes and other water bodies of Isabella County so as to avoid pollution of these water bodies and ensure the natural resources of the county are protected.

SECTION 6.04 PERMITTED USES

The following abbreviations apply to the Table of Permitted Uses for the R-1, Low-Density Residential District, R-2, Medium Density Residential District, and L-R, Lakes Area Residential District:

P: Permitted Use: Land and/or buildings in this District may be used for the purposes listed by right.

SLU: Special Land Use: The following uses may be permitted by obtaining Special Land Use approval when all applicable standards cited in Article 12 are met.

NP: Not Permitted: The use is not permitted in the District.

	Table of Permitted Uses	R-1	R-2	L-R
	Bed and Breakfast Establishments. ***(01-03 Eff. November 16, 2001)***	SLU	SLU	SLU
	Communication Towers and Antennas ***(01-02 Eff. October 4, 2001)***	NP	SLU	NP
	Convenience centers ***(89-05 Eff. January 26, 1990)***	NP	NP	SLU
	Country clubs and golf courses	NP	NP	SLU
	Family Child Care Homes ***(08-05 Eff. June 2, 2008)***	P	P	P
	Group Child Care Homes ***(08-05 Eff. June 2, 2008)***	SLU	SLU	SLU
	Home occupations (see Section 3.16) ***(89-05 Eff. January 26, 1990)***	P	P	P
	Marinas, yacht and boat clubs	NP	NP	SLU
	Planned Unit Developments	SLU (SFD Only)	SLU (SFD, two & multi-family)	SLU
	Public and institutional uses	NP	SLU	SLU
	Public Parks	SLU	NP	NP
	Recycling Drop-off Sites ***(92-08 Eff. January 21, 1993)***	SLU	SLU	SLU
	Restaurants	NP	NP	SLU
	Single-family dwellings	P	P	P
	State licensed residential facilities (6 or fewer residents) ***(89-05 Eff. January 26, 1990)***	P	P	P
	Two family dwellings	NP	P	NP
	A. The keeping of horses, goats or sheep shall be permitted provided that the following conditions are met: 1. There shall be permitted no more than a total of four such individual animals, or combination; 2. The lot is a minimum of five acres; 3. No animal is housed within 100 feet of any adjoining residential property line; 4. All manure is incorporated or disposed of in a reasonable manner taking into account the season of the year and wind direction.	P	NP	NP

SECTION 6.05 SCHEDULE OF DISTRICT REGULATIONS (*09-01 Eff. August 3, 2009*)

Requirement		R-1	R-2	L-R
	Min. Lot Area (sq ft)	30,000	12,000	15,000
	Max. Lot Depth (ft)	-	-	-
	Min. Lot Width (ft) (A)	150	80	80
	Min. Front Yard (ft)	40	35	25
	Min. Side Yard (ft)	20	10	10
	Min. Rear Yard (ft)	35	35	35
	Max. Height (ft)	35	35	35
	Max. Lot Coverage (%)	50	50	50
	Min. Dwelling Area (sq ft)	850	720	720
	Min. Dwelling Width (ft)	24	14	24

A. Lot width shall be measured at the front building line. For lots with irregular shapes, the minimum horizontal distance between two side lot lines shall not be less than 75 percent of the minimum lot width. Where lot frontage is on the inside of a curve, a cul-de-sac, or similar condition, the width shall be determined as the average of the total of the front and rear lot lines.

SECTION 6.06 SITE DEVELOPMENT STANDARDS

The use of land and structures within the Residential Districts shall meet the dimensional requirements specified in Section 6.05 and the General Provisions in Article 3.

SECTION 6.07 OFF-STREET PARKING AND LOADING

A. SCOPE

In all zoning districts, off-street parking facilities for the parking of self-propelled motor vehicles for the use of occupants, employees and patrons of the buildings hereafter erected, altered or extended after the effective date of this ordinance, shall be provided as herein prescribed.

B. MEASUREMENT UNITS

For the purpose of determining the off-street parking and loading facilities required as accessory to a use, definitions and standards are established as follows:

1. Off-street Parking Area: An open or enclosed area directly accessible from a public or private street for parking of automobiles of owners, occupants, employees, customers or tenants of the main use. Each space shall be directly accessible from a drive or aisle.

2. Usable Floor Area (UFA): Used in determining parking requirements, usable floor area shall mean the total area of all the floors of the building used by the principal activities as specified in the Parking Schedule, measured from the exterior faces of the building. The areas used for storage, mechanical equipment, stairwells or otherwise not occupied by people shall be excluded from the floor area calculation.

3. Gross Floor Area (GFA): Used in determining loading requirements, gross floor area means the total floor area used for the main and accessory activities and storage areas of the building served.

4. Seating Capacity: The number of seating units installed or indicated on plans for places of assembly; where not indicated on plans, it shall be assumed that a seating unit will occupy six square feet of floor area exclusive of all aisles; where benches, pews or other similar seating is provided, each 20 inches of such seating shall be counted as one seat.

5. Employees: Wherever the parking requirements are based on employees, it shall mean the maximum number of employees on duty on the premises at one time or on any two successive shifts, whichever is the greater.

6. Off-street Loading Space. An open space or enclosed area as part of a building directly accessible to a public street and available whenever needed for the loading or unloading of goods and products to the main use.

C. REQUIRED PARKING FACILITIES

The zoning administrator shall determine the minimum number of spaces required for accessory off-street parking by applying the schedule of parking requirements for the various uses and any other applicable provisions of this ordinance. Where the computation results in a fractional space, it shall be counted as one additional space required. The planning commission may vary the parking requirements of this article where it finds that due to the nature of the particular use, said requirements will not be adequate to provide sufficient parking or where the strict application of the requirements will result in an excess amount of parking related to the particular use. ***(08-09 Eff. October 25, 2008)***

D. SCHEDULE OF PARKING REQUIREMENTS

The number of off-street parking spaces required by type of use shall be determined in accordance with the following schedule.

Use	Parking Requirement Spaces per unit of measurement
Residential	
One and two family dwellings	2 Per dwelling unit
Multiple family, townhouses, Manufactured homes	2 Per dwelling unit
Bed and breakfasts	1 Per rented room plus 2 for resident family
Fraternities, Sororities	1 Per each bed
Institutional	
Child care center, day nurseries, nursery schools	1 Per 400 sq. ft. UFA plus 1 Per each employee
Churches	1 Per four (4) seats
Schools	1 Per teacher plus 1 Per employee plus 1 Per each four (4) high School students
Libraries, museums, public office buildings, post offices	1 Per 800 sq. ft. UFA plus 1 Per each two (2) employees
Private clubs or lodges	1 Per three (3) members allowed by law
Public golf courses	6 Per hole plus 1 Per employee

Use	Parking Requirement Spaces per unit of measurement
Private golf, tennis swim clubs	1 Per two (2) member families or individual membership
Theaters, auditoriums, assembly halls	1 Per four (4) seats
Hospitals and nursing homes	1 Per each four (4) beds plus 1 Per each staff doctor plus 1 Per each two (2) employees
Public outdoor recreation facilities	1 Per each four (4) seats or eight (8) feet of benches plus 10 Per each one (1) acre of undesignated area
Businesses	
Animal hospitals and kennels	1 Per each 400 sq. ft. UFA plus 1 Per each two (2) employees
Auto salesrooms, and automobile service garages	1 Per each 200 sq. ft. UFA plus 1 Per each service stall
Automobile wash establishments	4 Per each unit (computed by dividing the line dimension of the operation by 20; for in-line waiting lanes) plus 1 Per each Employee
Beauty or barber shops	1 Per each three (3) beauty or barber chairs plus 1 Per each employee
Bowling alleys	5 Per bowling lane
Dance halls, exhibition halls, pool halls, and assembly halls without fixed seats	1 Per each two (2) persons within the maximum occupancy load
Drive-in restaurants or similar drive-in uses for of food, beverages or refreshments	1 Per each 50 sq. ft. UFA (for in-line waiting lanes), plus 1 Per each three (3) employees, with a minimum total of 20 parking spaces
Furniture, appliances and household equipment, repair shops, hardware stores and other similar uses	1 Per each 800 sq. ft. UFA plus 1 Per each two (2) employees
Laundromats, coin operated dry cleaning establishment	1 Per each three (3) washing machines
Miniature or “Par 3” golf courses	3 Per each hole plus 1 Per each employee
Mortuary establishments	1 Per each 25 sq. ft. assembly room
Motels and hotels	1 Per each guest bedroom, plus 1 Per each employee

Use	Parking Requirement Spaces per unit of measurement
Restaurants and other establishments (other than drive-in restaurants) in which is conducted the sale and consumption on the premises of food, beverages or refreshments	1 Per each 75 sq. ft. UFA plus 1 Per each three (3) bar seats
Retail stores, mixed commercial uses or personal service establishments, except as otherwise specified herein	1 Per each 200 sq. ft. UFA
Offices	
Banks (other than drive-in banks) and business and professional offices	1 Per each 100 sq. ft. UFA
Drive-in banks	3 Per each teller window (in-line waiting lanes) plus 1 Per each employee
Medical clinics and dental clinics	3 Per each staff or visiting doctor plus 1 Per each employee
Industry	
Industrial or manufacturing establishments, research establishments, warehouses and storage buildings	1 Per each two (2) employees (or) 1 Per each 1,500 sq. ft. GFA (whichever is greater)

E. PARKING AND DRIVEWAY PLANS

Any person desiring to establish or change a driveway or parking area, except for farming or residential purposes, shall submit plans to the zoning administrator showing the location size, shape, design, landscaping, surface marking, lighting, drainage, curb cuts, entrances, exits and any other features of the driveways and parking lot. Plans shall be approved by the county planning commission who may request the advice and comment of the county engineer. All nonresidential and multiple family dwelling parking areas and driveways shall be designed to: ***(08-09 Eff. October 25, 2008)***

1. Provide convenient and safe automobile circulation and parking in relation to streets, pedestrian walkways and adjoining properties or parking areas.

2. Insure adequate visual sight distances.

3. Minimize conflicts of traffic movements on public streets.

4. Insure the safety, convenience and well being of adjoining property owners and the public.

F. PLANS FILED

All approved plot or development plans for parking areas shall be signed and kept on file by the zoning administrator ***(08-09 Eff. October 25, 2008)***.

G. LOCATION OF PARKINGS

In residential districts, all required parking areas shall be provided on the same lot with the principal use. In C-1 or C-2 Districts required parking shall be provided within 300 feet walking distance of the principal building and within 500 feet of the principal building in I-1 Districts. The planning commission may have the discretion to waive or amend this requirement in special circumstances.

H. COMMUNITY PARKING

Where a property owner participates or has participated in the cost of a public area, it shall be stated on plans as required by Section 6.07 (E).

I. MINIMUM STANDARDS

Every off street parking, loading or driveway area hereafter enlarged, altered or constructed, shall be developed and maintained in accordance with the following.

1. Surfacing. These areas shall be surfaced with durable material and graded and drained to dispose of all surface water to the nearest storm drain or street or as required by the county engineer. Acceptable materials are asphalt and concrete.

2. Driveways. Driveways in commercial or industrial districts shall be no closer than 20 feet to a property zoned or used for residential purpose.

3. Parking in Front Yard. Off-street parking areas in commercial or industrial districts shall be permitted to occupy a portion of the required front yard, provided that there shall be maintained a landscaped area of 10 feet between the parking area and the road right-of-way.

4. Screening. All driveway and parking areas in commercial or industrial districts shall be effectively screened from any property zoned or used for residential purposes in accordance with Section 3.23.

5. Curbing. Curbing or similar physical barriers shall be provided at the edges of all parking areas to protect required yards and pedestrians.

6. Lighting. Lighting shall be reflected down and away from any residential property or public street.

7. Area. The minimum area of a parking space shall be 180 square feet except that such space shall be at least 250 square feet for spaces required for handicapped parking.

8. Landscaping. All parking areas containing 20 or more parking spaces shall have a minimum of 10% of the surface area landscaped as required by the planning commission.

J. JOINT USE OF PARKING FACILITIES

1. The joint use of parking facilities by two or more uses is encouraged whenever practical and satisfactory to each of the uses to be served. A reduction of individual parking requirements may be permitted by the planning commission in cases where neighboring uses have significantly different hours of operation from each other. However, each use shall provide a minimum of 50% of its individual off-street parking requirements.

2. Prior to approving any request for joint use of parking facilities, the planning commission shall consider:

   a. the location, number and spacing of driveways;

   b. the use of landscaping to soften the visual impact of the parking lot;

   c. internal circulation patterns and access to all participating uses; and

   d. potential conflicts among users and changes in parking demand.

3. The planning commission may require, as a condition of approval, a copy of an agreement among participants to share parking facilities. Such agreement shall specify the time period for which such arrangement is agreed to.

K. OFF-STREET LOADING REQUIREMENTS

On the same premises with every building or part thereof, erected and occupied for manufacturing, storage, warehouse, good display, department store, wholesale, market, hospital, laundry, dry cleaning or other uses similarly involving the receipt or distribution of vehicles, material or merchandise, there shall be provided and maintained on the lot adequate space for standing, loading and unloading services in order to avoid undue interference with street or parking areas. In C-1, C-2 and I-1 Districts, such space shall be provided for any new building hereafter erected or enlarged, regardless of the intended use.

1. Such loading and unloading space, shall be at least 12 feet in width, 50 feet in length and accessible from a street, alley or private drive.

2. Such spaces shall be provided according to the following schedule:

Gross Floor Area in Square Feet	Loading and Unloading Spaces Required
0-10,000	One space
Each additional 20,000	One additional space

3. Off-street loading space area shall not be construed as, or counted towards, the supplying of area required as off-street parking space area.

SECTION 6.08 SIGNS *(11-03 Eff. January 30, 2012)*

A. The following signs are permitted in all Residential Districts and require a zoning permit prior to installation:

1. One (1) externally illuminated entranceway monument sign up to eighteen (18) square feet is permitted for residential developments. One sign for each major public road frontage may be provided. Sign(s) shall be placed no closer than ten (10) feet to any lot line and shall not exceed eight (8) feet in height.

2. One (1) freestanding sign of up to twenty four (24) square feet for lawful institutional uses such as churches, schools and parks. Sign shall be placed no closer than ten (10) feet to any lot line and shall not exceed eight (8) feet in height. One (1) wall sign of up to twenty four (24) square feet may also be permitted.

3. One (1) non-illuminated wall sign of up to eight (8) square feet for family and group child care homes and home occupations. For homes setback more than fifty (50) feet from the road, one (1) non-illuminated freestanding sign of up to eight (8) square feet and not exceeding four (4) feet in height may be substituted for wall sign provided the sign is placed no closer than ten (10) feet to any lot line.

4. One (1) non-illuminated freestanding sign of up to twelve (12) square feet for all other authorized uses, unless otherwise regulated in this ordinance. Sign shall be placed no closer than ten (10) feet to any lot line and shall not exceed eight (8) feet in height. One (1) non-illuminated wall sign of up to twelve (12) square feet may also be permitted.

B. The following signs do not require a zoning permit:

1. On-site political campaign signs, provided they are removed within 10 days after the election to which they pertain.

2. Non-illuminated Real Estate signs of up to eight (8) square feet, provided they are removed within 10 days after consummation of lease or sale of property.

3. Non-illuminated trespassing, safety, directional, caution or announcement signs each not exceeding two (2) square feet in area or signs announcing the sale of produce each not exceeding six (6) square feet in area.

4. Name plates.

5. Signs that have been approved in conjunction with a valid zoning permit for any principal use as detailed in a plot plan or site plan.

6. Road name signs and other signs established by state, county, or township units of government when necessary for giving proper directions or otherwise safeguarding the public in any district.

7. Non-advertising signs erected by any organization, person, firm, or corporation that are needed to warn the public of dangerous conditions and unusual hazards including: caving ground, drop-offs, high voltage, fire danger, explosives, severe visibility limits, etc., in any districts.

C. The following signs are prohibited:

1. A sign resembling the flashing lights customarily used in traffic signals, or police, fire, ambulance, or rescue vehicle or signs which imitate official traffic directional signs or devices.

2. Illuminated signs where the source of light is directed in a manner where light is shining directly onto traffic or neighboring properties

3. A sign using the words, “Stop”, “Danger”, or any other words, phrases, symbols, or characters, in such a manner as to interfere with, mislead, or confuse a vehicle driver.

4. Billboards and other off-premise signs.

5. Signs on parked vehicles where the sign is the primary use of the vehicle.

6. Signs greater than two (2) square feet that are affixed to trees, shrubs or similar natural features.

7. Signs affixed to fences or utility poles or structural elements not capable of supporting such signs.

8. Any sign which obstructs the ingress or egress from a required door, window, or other required exit.

9. Signs and advertising devices including banners, balloons, flags, pennants, pinwheels, searchlights, inflatable devices or any other sign or device with similar characteristics, except when used temporarily for periods not to exceed thirty (30) days within any six (6) month period.

10. Signs containing words, lettering, silhouettes, drawings or pictorial representation that are of a sexual explicit nature.

11. Signs placed within the road right-of-way.

12. Signs that obstruct the clear vision area of a road that results in a traffic hazard or interferes with the safe ingress and egress of a parcel.

13. Electronic message boards, except those which display only the date, time, temperature or the price of a product sold on the property.

14. Signs containing flashing, intermittent or moving lights.

15. Signs with moving or revolving parts.

16. Wall signs that project above the roof line or cornice

D. Signs which no longer advertise an existing business or service establishment must be removed by the owner within 30 days after written notification from the Zoning Administrator.

ARTICLE 7
COMMERCIAL DISTRICTS

SECTION 7.01 DESCRIPTION AND PURPOSE GENERAL COMMERCIAL DISTRICT (C-1)

The General Commercial District is designed to meet the diversified and day-to-day shopping and service needs of persons residing in the county as well as the needs of automobile highway traffic along the major transportation routes in the county. These districts may be characterized by an integrated or planned cluster of establishments served by a common parking area and generating somewhat large volumes of vehicular and pedestrian traffic.

SECTION 7.02 DESCRIPTION AND PURPOSE RECREATION COMMERCIAL DISTRICT (C-2)

The Recreation Commercial District is designed to serve the specialized needs of the county residents and visitors for recreation, amusement, service and commercial activities commonly associated with the county Fairgrounds. This district is designed to provide for select recreation and commercial enterprises that may be incompatible with, and should be separated from traditional commercial activities.

SECTION 7.03 PERMITTED USES

The following abbreviations apply to the Table of Permitted Uses for the C-1, General Commercial District, C-2, Recreation Commercial District:

P: Permitted Use: Land and/or buildings in this District may be used for the purposes listed by right.

SLU: Special Land Use: The following uses may be permitted by obtaining Special Land Use approval when all applicable standards cited in Article 12 are met.

NP: Not Permitted: The use is not permitted in the District.

Table of Permitted Uses		C-1	C-2
	Adult entertainment activities ***(89-04 Eff. October 19, 1989)***	SLU	NP
	Apartments (2nd floor)	SLU	NP
	Auction Facilities ***(08-11 Eff. November 3, 2008)***	SLU	NP
	Auto wash establishments when completely or partially enclosed in a building	P	NP
	Bowling alley, billiard hall, indoor archery range, indoor tennis courts, indoor skating rink or similar forms of indoor commercial recreation when located at least 100 feet from any residential use or district	P	NP
	Bus passenger stations	P	NP
	Business establishments which perform services on the premises such as, but not limited to: banks, loan companies, insurance offices and real estate offices	P	NP
	Business schools, colleges and private schools	P	NP
	Churches	P	NP
	Communication Towers and Antennas ***(01-02 Eff. October 4, 2001)***	SLU	SLU
	Child Care Centers ***(08-05 Eff. June 2, 2008)***	SLU	NP
	Dry cleaning establishments or pick-up stations dealing directly with the consumer. Central dry cleaning plants serving more than one retail outlet shall be prohibited	P	NP
	Existing Single-Family Dwellings ***(01-07 Eff. February 5, 2002)***	SLU	SLU
	Fairgrounds, flea markets and amusement parks	NP	SLU
	Filling stations and convenience centers [see Section 7.06 (E)]	P	SLU
	Generally recognized retail businesses which supply commodities on the premises such as, but not limited to: groceries, meats, dairy products, baked goods or other foods, drugs, dry goods, clothing, notions and hardware	P	NP
	Hotels, motels and other transient lodging ***(94-03 Eff. January 31, 1995)***	P	SLU
	Instant oil change establishments when completely or partially enclosed in a building	P	NP
	Meat processing plants	SLU	NP
	Miniature golf and golf driving ranges ***(94-03 Eff. January 31, 1995)***	P	SLU
	Mini-warehouse	SLU	NP
	Mortuaries	P	NP
	Motor vehicle repair facilities ***(89-05 Eff. January 26, 1990)***	P	NP

Table of Permitted Uses		C-1	C-2
	New and used car sales and service	P	NP
	Office buildings for occupations such as, but not limited to: executive, administrative, professional, accounting, writing, clerical, stenographic, drafting and sales	P	NP
	Personal service establishments which perform services on the premises such as, but not limited to: repair shops (watches, radio, television, shoe, etc.), tailor shops, beauty parlors or barber shops, photographic studios, self-service laundries and dry cleaners, excluding automobile service garages	P	NP
	Planned unit development	SLU	NP
	Private clubs, fraternal organizations and lodge halls	P	NP
	Professional services such as, but not limited to: offices of doctors, dentists, osteopaths and similar or allied professions, including clinics	P	NP
	Race Tracks	NP	SLU
	Recycling drop-off sites ***(92-08 Eff. January 21, 1993)***	SLU	SLU
	Restaurants or other places serving food or beverage	P	SLU
	Retail sales of plant material not grown on the premises, lawn furniture, playground equipment and garden supplies	P	NP
	Theaters, assembly halls, concert halls, or similar places of assembly when conducted completely within enclosed buildings	P	NP

SECTION 7.04 SCHEDULE OF DISTRICT REGULATIONS (*02-04 Eff. May 1, 2002*)

Requirement		C-1	C-2
	Min. Lot Area (sq ft)	12,000	43,560
	Max. Lot Depth (ft)	-	-
	Min. Lot Width (ft) (A)	80	200
	Min. Front Yard (ft)	50(B)	50
	Min. Total Side Yard (ft)	10(C)	40(C)
	Min. Least One Side Yard (ft)	(C)	20(C)
	Min. Rear Yard (ft)	25(C)	35(C)
	Max. Height (ft)	35	35(D)
	Max. Lot Coverage (%)	-	-
	Min. Dwelling Area (sq ft)	-	-
	Min. Dwelling Width (ft)	-	-

A. Lot width shall be measured at the front building line. For lots with irregular shapes, the minimum horizontal distance between two side lot lines shall not be less than 75 percent of the minimum lot width. Where lot frontage is on the inside of a curve, a cul-de-sac, or similar condition, the width shall be determined as the average of the total of the front and rear lot lines.

B. In the C-1 District, a front yard of at least 75 feet must be provided on state highways.

C. No principal or accessory building in C-1, C-2, or I-1 Districts shall be closer than 60 feet to the property line of any residential use or district as provided in Section 7.06(D). (*89-05 Eff. January 26, 1990*)

D. The height limitation in C-2 Districts may be specifically waived by the planning commission provided that the planning commission establishes alternate reasonable height standards.

SECTION 7.05 SITE DEVELOPMENT STANDARDS

The use of land and structures within the General Commercial and Recreation Commercial Districts shall meet the dimensional requirements in Section 7.04 and the General Provisions in Article 3.

SECTION 7.06 ADDITIONAL REQUIREMENTS

A. All outdoor storage shall be restricted to rear and side yards and shall be completely screened in accordance with Section 3.23. All outdoor sales areas shall be set back a minimum of 50 feet from any residential use or district and shall be screened in accordance with Section 3.23.

B. All development shall be physically separated from the local road by a curb and 10 foot landscaped area or other suitable barrier. Such barrier shall effectively eliminate unchanneled vehicle ingress or egress, except for authorized access ways.

C. Each separate use, grouping of buildings or grouping of uses as part of a single planned development, shall have at least two access ways from a local road. Such access way shall not be located closer than 50 feet to an intersecting road right-of-way. In those instances where properties fronting on a local road cannot meet this 50 foot requirement, a service road shall be provided.

D. Unless otherwise specified in Article 12, no principal or accessory building shall be closer than 60 feet to the property line of any residential use or district. A planted landscaped area of at least 10 feet in width, meeting the screening standards specified in Section 3.23, shall be provided in the required setback.

E. Filling stations, motor vehicle repair facilities, and convenience centers shall also comply with the following: ***(89-05 Eff. January 26, 1990)***

1. Curb cuts for access to a filling station shall not be permitted at such locations that will tend to create traffic hazards in the streets immediately adjacent thereto. Entrances shall be no less than 50 feet from a street intersection (measured from the road right-of-way) or from adjacent residential districts.

2. The minimum lot area shall be 15,000 square feet and arranged so that ample space is available for all motor vehicles. Filling stations and convenience centers which are intended solely for the sale of gasoline, oil and minor accessories, having no facilities for repair or servicing of automobiles (including lubricating facilities), may be permitted on lots meeting the lot area requirements of the district it is located in

SECTION 7.07 OFF-STREET PARKING AND LOADING

A. SCOPE

In all zoning districts, off-street parking facilities for the parking of self-propelled motor vehicles for the use of occupants, employees and patrons of the buildings hereafter erected, altered or extended after the effective date of this ordinance, shall be provided as herein prescribed.

B. MEASUREMENT UNITS

For the purpose of determining the off-street parking and loading facilities required as accessory to a use, definitions and standards are established as follows:

1. Off-street Parking Area: An open or enclosed area directly accessible from a public or private street for parking of automobiles of owners, occupants, employees, customers or tenants of the main use. Each space shall be directly accessible from a drive or aisle.

2. Usable Floor Area (UFA): Used in determining parking requirements, usable floor area shall mean the total area of all the floors of the building used by the principal activities as specified in the Parking Schedule, measured from the exterior faces of the building. The areas used for storage, mechanical equipment, stairwells or otherwise not occupied by people shall be excluded from the floor area calculation.

3. Gross Floor Area (GFA): Used in determining loading requirements, gross floor area means the total floor area used for the main and accessory activities and storage areas of the building served.

4. Seating Capacity: The number of seating units installed or indicated on plans for places of assembly; where not indicated on plans, it shall be assumed that a seating unit will occupy six square feet of floor area exclusive of all aisles; where benches, pews or other similar seating is provided, each 20 inches of such seating shall be counted as one seat.

5. Employees: Wherever the parking requirements are based on employees, it shall mean the maximum number of employees on duty on the premises at one time or on any two successive shifts, whichever is the greater.

6. Off-street Loading Space. An open space or enclosed area as part of a building directly accessible to a public street and available whenever needed for the loading or unloading of goods and products to the main use.

C. REQUIRED PARKING FACILITIES

The zoning administrator shall determine the minimum number of spaces required for accessory off-street parking by applying the schedule of parking requirements for the various uses and any other applicable provisions of this ordinance. Where the computation results in a fractional space, it shall be counted as one additional space required. The planning commission may vary the parking requirements of this article where it finds that due to the nature of the particular use, said requirements will not be adequate to provide sufficient parking or where the strict application of the requirements will result in an excess amount of parking related to the particular use. ***(08-09 Eff. October 25, 2008)***

D. SCHEDULE OF PARKING REQUIREMENTS

The number of off-street parking spaces required by type of use shall be determined in accordance with the following schedule.

Use	Parking Requirement Spaces per unit of measurement
Residential	
One and two family dwellings	2 Per dwelling unit
Multiple family, townhouses, Manufactured homes ***(08-03 Eff. June 2, 2008)***	2 Per dwelling unit
Bed and breakfasts	1 Per rented room plus 2 for resident family
Fraternities, Sororities	1 Per each bed
Institutional	
Child care center, day nurseries, nursery schools	1 Per 400 sq. ft. UFA plus 1 Per each employee
Churches	1 Per four (4) seats
Schools	1 Per teacher plus 1 Per employee plus 1 Per each four (4) high School students
Libraries, museums, public office buildings, post offices	1 Per 800 sq. ft. UFA plus 1 Per each two (2) employees
Private clubs or lodges	1 Per three (3) members allowed by law
Public golf courses	6 Per hole plus 1 Per employee
Private golf, tennis swim clubs	1 Per two (2) member families or individual membership
Theaters, auditoriums, assembly halls	1 Per four (4) seats
Hospitals and nursing homes	1 Per each four (4) beds plus 1 Per each staff doctor plus 1 Per each two (2) employees

Use	Parking Requirement Spaces per unit of measurement
Public outdoor recreation facilities	1 Per each four (4) seats or eight (8) feet of benches plus 10 Per each one (1) acre of undesignated area
Businesses	
Animal hospitals and kennels	1 Per each 400 sq. ft. UFA plus 1 Per each two (2) employees
Auto salesrooms, and automobile service garages	1 Per each 200 sq. ft. UFA plus 1 Per each service stall
Automobile wash establishments	4 Per each unit (computed by dividing the line dimension of the operation by 20; for in-line waiting lanes) plus 1 Per each Employee
Beauty or barber shops	1 Per each three (3) beauty or barber chairs plus 1 Per each employee
Bowling alleys	5 Per bowling lane
Dance halls, exhibition halls, pool halls, and assembly halls without fixed seats	1 Per each two (2) persons within the maximum occupancy load
Drive-in restaurants or similar drive-in uses for of food, beverages or refreshments	1 Per each 50 sq. ft. UFA (for in-line waiting lanes), plus 1 Per each three (3) employees, with a minimum total of 20 parking spaces
Furniture, appliances and household equipment, repair shops, hardware stores and other similar uses	1 Per each 800 sq. ft. UFA plus 1 Per each two (2) employees
Laundromats, coin operated dry cleaning establishment	1 Per each three (3) washing machines
Miniature or “Par 3” golf courses	3 Per each hole plus 1 Per each employee
Mortuary establishments	1 Per each 25 sq. ft. assembly room
Motels and hotels	1 Per each guest bedroom, plus 1 Per each employee
Restaurants and other establishments (other than drive-in restaurants) in which is conducted the sale and consumption on the premises of food, beverages or refreshments	1 Per each 75 sq. ft. UFA plus 1 Per each three (3) bar seats
Retail stores, mixed commercial uses or personal service establishments, except as otherwise specified herein	1 Per each 200 sq. ft. UFA

Use	Parking Requirement Spaces per unit of measurement
Offices	
Banks (other than drive-in banks) and business and professional offices	1 Per each 100 sq. ft. UFA
Drive-in banks	3 Per each teller window (in-line waiting lanes) plus 1 Per each employee
Medical clinics and dental clinics	3 Per each staff or visiting doctor plus 1 Per each employee
Industry	
Industrial or manufacturing establishments, research establishments, warehouses and storage buildings	1 Per each two (2) employees (or) 1 Per each 1,500 sq. ft. GFA (whichever is greater)

E. PARKING AND DRIVEWAY PLANS

Any person desiring to establish or change a driveway or parking area, except for farming or residential purposes, shall submit plans to the zoning administrator showing the location size, shape, design, landscaping, surface marking, lighting, drainage, curb cuts, entrances, exits and any other features of the driveways and parking lot. Plans shall be approved by the county planning commission who may request the advice and comment of the county engineer. All nonresidential and multiple family dwelling parking areas and driveways shall be designed to: ***(08-09 Eff. October 25, 2008)***

1. Provide convenient and safe automobile circulation and parking in relation to streets, pedestrian walkways and adjoining properties or parking areas.

2. Insure adequate visual sight distances.

3. Minimize conflicts of traffic movements on public streets.

4. Insure the safety, convenience and well being of adjoining property owners and the public.

F. PLANS FILED

All approved plot or development plans for parking areas shall be signed and kept on file by the zoning administrator ***(08-09 Eff. October 25, 2008)***.

G. LOCATION OF PARKINGS

In residential districts, all required parking areas shall be provided on the same lot with the principal use. In C-1 or C-2 Districts required parking shall be provided within 300 feet walking distance of the principal building and within 500 feet of the principal building

in I-1 Districts. The planning commission may have the discretion to waive or amend this requirement in special circumstances.

H. COMMUNITY PARKING

Where a property owner participates or has participated in the cost of a public area, it shall be stated on plans as required by Section 7.07(E).

I. MINIMUM STANDARDS

Every off street parking, loading or driveway area hereafter enlarged, altered or constructed, shall be developed and maintained in accordance with the following.

1. Surfacing. These areas shall be surfaced with durable material and graded and drained to dispose of all surface water to the nearest storm drain or street or as required by the county engineer. Acceptable materials are asphalt and concrete.

2. Driveways. Driveways in commercial or industrial districts shall be no closer than 20 feet to a property zoned or used for residential purpose.

3. Parking in Front Yard. Off-street parking areas in commercial or industrial districts shall be permitted to occupy a portion of the required front yard, provided that there shall be maintained a landscaped area of 10 feet between the parking area and the road right-of-way.

4. Screening. All driveway and parking areas in commercial or industrial districts shall be effectively screened from any property zoned or used for residential purposes in accordance with Section 3.23.

5. Curbing. Curbing or similar physical barriers shall be provided at the edges of all parking areas to protect required yards and pedestrians.

6. Lighting. Lighting shall be reflected down and away from any residential property or public street.

7. Area. The minimum area of a parking space shall be 180 square feet except that such space shall be at least 250 square feet for spaces required for handicapped parking.

8. Landscaping. All parking areas containing 20 or more parking spaces shall have a minimum of 10% of the surface area landscaped as required by the planning commission.

J. JOINT USE OF PARKING FACILITIES

1. The joint use of parking facilities by two or more uses is encouraged whenever practical and satisfactory to each of the uses to be served. A reduction of individual parking requirements may be permitted by the planning commission in cases where neighboring uses have significantly different hours of operation from each other. However, each use shall provide a minimum of 50% of its individual off-street parking requirements.

2. Prior to approving any request for joint use of parking facilities, the planning commission shall consider:

   a. the location, number and spacing of driveways;

   b. the use of landscaping to soften the visual impact of the parking lot;

   c. internal circulation patterns and access to all participating uses; and

   d. potential conflicts among users and changes in parking demand.

3. The planning commission may require, as a condition of approval, a copy of an agreement among participants to share parking facilities. Such agreement shall specify the time period for which such arrangement is agreed to.

K. OFF-STREET LOADING REQUIREMENTS

On the same premises with every building or part thereof, erected and occupied for manufacturing, storage, warehouse, good display, department store, wholesale, market, hospital, laundry, dry cleaning or other uses similarly involving the receipt or distribution of vehicles, material or merchandise, there shall be provided and maintained on the lot adequate space for standing, loading and unloading services in order to avoid undue interference with street or parking areas. In C-1, C-2 and I-1 Districts, such space shall be provided for any new building hereafter erected or enlarged, regardless of the intended use.

1. Such loading and unloading space, shall be at least 12 feet in width, 50 feet in length and accessible from a street, alley or private drive.

2. Such spaces shall be provided according to the following schedule:

Gross Floor Area in Square Feet	Loading and Unloading Spaces Required
0-10,000	One space
Each additional 20,000	One additional space

3. Off-street loading space area shall not be construed as, or counted towards, the supplying of area required as off-street parking space area.

SECTION 7.08 SIGNS *(11-03 Eff. January 30, 2012)*

A. The following signs are permitted in all Commercial Districts and require a zoning permit prior to installation:

1. One (1) freestanding sign for a shopping center. The total sign area shall not exceed one (1) square foot for each foot of building frontage. The maximum size of a sign is two hundred (200) square feet. Sign shall be placed no closer than ten (10) feet to any lot line. A monument sign shall not exceed ten (10) feet in height. All other freestanding signs shall not exceed twenty (20) feet in height.

2. One (1) freestanding sign of up to eighty (80) square feet for all other authorized uses. Sign shall be placed no closer than ten (10) feet to any lot line. A monument sign shall not exceed ten (10) feet in height. All other freestanding signs shall not exceed twenty (20) feet in height.

3. Wall signs for all authorized uses. The total sign area shall not exceed one (1) square foot for each foot in length or height of the wall, whichever is greater, to which it is affixed.

4. One (1) billboard structure is permitted and regulated as follows:

   a. No billboard shall be located within 250' of a property line of an adjacent residential district or use.

   b. Billboard structure may contain one billboard facing each direction of traffic and the maximum size of each billboard shall be 300 square feet.

   c. Maximum height of a billboard shall be 35 feet above average grade.

   d. Billboard structure shall not be permitted adjacent to or within 500 feet of an interchange. The 500 feet shall be measured from the point of beginning or ending of pavement widening at the exit from, or entrance to, the main-traveled way.

   e. No billboard shall be permitted on a lot that has any existing buildings, structures or signs. No further buildings, structures or signs shall be permitted on the lot until the billboard has been completely removed.

   f. No billboard shall be constructed or erected on a lot so as to obstruct the view of adjacent buildings or signs.

g. No billboard shall be constructed to obstruct the clear vision area of a road or intersection that results in a traffic hazard or interferes with the safe ingress and egress of a parcel.

h. Billboards shall meet all building setback requirements for the district in which they are located.

i. Billboards adjacent to a State Highway may be illuminated meeting the requirements of the Highway Advertising Act, PA 106 of 1972 as amended. All other billboards shall not be illuminated.

B. The following signs do not require a zoning permit:

1. On-site political campaign signs, provided they are removed within 10 days after the election to which they pertain.

2. Non-illuminated Real Estate signs of up to eight (8) square feet, provided they are removed within 10 days after consummation of lease or sale of property.

3. Non-illuminated trespassing, safety, directional, caution or announcement signs each not exceeding two (2) square feet in area or signs announcing the sale of produce each not exceeding six (6) square feet in area.

4. Name plates.

5. Signs that have been approved in conjunction with a valid zoning permit for any principal use as detailed in a plot plan or site plan.

6. Road name signs and other signs established by state, county, or township units of government when necessary for giving proper directions or otherwise safeguarding the public in any district.

7. Non-advertising signs erected by any organization, person, firm, or corporation that are needed to warn the public of dangerous conditions and unusual hazards including: caving ground, drop-offs, high voltage, fire danger, explosives, severe visibility limits, etc., in any districts.

C. The following signs are prohibited:

1. A sign resembling the flashing lights customarily used in traffic signals, or police, fire, ambulance, or rescue vehicle or signs which imitate official traffic directional signs or devices.

2. Illuminated signs where the source of light is directed in a manner where light is shining directly onto traffic or neighboring properties.

3. A sign using the words, “Stop”, “Danger”, or any other words, phrases, symbols, or characters, in such a manner as to interfere with, mislead, or confuse a vehicle driver.

4. Signs on parked vehicles where the sign is the primary use of the vehicle.

5. Off premise signs, except billboards

6. Signs greater than two (2) square feet that are affixed to trees, shrubs or similar natural features.

7. Signs affixed to fences or utility poles or structural elements not capable of supporting such signs.

8. Any sign which obstructs the ingress or egress from a required door, window, or other required exit.

9. Signs and advertising devices including banners, balloons, flags, pennants, pinwheels, searchlights, inflatable devices or any other sign or device with similar characteristics, except when used temporarily for periods not to exceed thirty (30) days within any six (6) month period.

10. Signs containing words, lettering, silhouettes, drawings or pictorial representation that are of a sexual explicit nature.

11. Signs placed within the road right-of-way.

12. Signs that obstruct the clear vision area of a road that results in a traffic hazard or interferes with the safe ingress and egress of a parcel.

13. Electronic message boards, except those which display only the date, time, temperature or the price of a product sold on the property, and except billboards that meet the requirements of the Highway Advertising Act, PA 106 of 1972 as amended.

14. Signs containing flashing, intermittent or moving lights.

15. Signs with moving or revolving parts.

16. Wall signs that project above the roof line or cornice

D. Signs which no longer advertise an existing business or service establishment must be removed by the owner within 30 days after written notification from the Zoning Administrator.

ARTICLE 8
(I-1) LIGHT INDUSTRIAL DISTRICT

SECTION 8.01 DESCRIPTION AND PURPOSE

The Light Industrial District is designed to accommodate wholesale activities, warehouses and industrial operations whose external and physical effects are for the most part restricted to the district. The I-1 District permits the manufacturing, compounding, processing, packaging, assembly and/or treatment of finished or semi-finished products from previously prepared material. The general goals of this District are as follows:

A. To provide sufficient space in appropriate locations to meet the needs of the county's future economic growth for all types of manufacturing and related uses.

B. To protect residential areas by separating them from manufacturing activities and by prohibiting the use of industrial areas for new residential development.

C. To promote manufacturing development which is free from danger of fire, explosions, toxic and noxious matter, radiation and other hazards and from offensive noise, vibration, smoke, odor and other objectionable influences.

D. To promote the most desirable use of land in accordance with a plan for the county. To protect the character and established pattern of adjacent developments and to conserve the value of land and buildings and other structures in the county.

SECTION 8.02 PERMITTED USES

The following abbreviations apply to the Table of Permitted Uses for the I-1, Light Industrial District:

P: Permitted Use: Land and/or buildings in this District may be used for the purposes listed by right.

SLU: Special Land Use: The following uses may be permitted by obtaining Special Land Use approval when all applicable standards cited in Article 12 are met.

NP: Not Permitted: The use is not permitted in the District.

	Table of Permitted Uses	I-1
	Any of the following uses when the manufacturing, compounding or processing is wholly within an enclosed building; provided they meet the industrial performance standards specified in Section 8.05 (C) (1-6). 1. Warehousing, wholesale establishments and trucking facilities 2. The manufacture, compounding, processing, packaging or treatment of products such as, but not limited to: bakery goods, candy, cosmetics, pharmaceutical, toiletries, food products, hardware, cutlery, tool, die, gauge and machine products 3. The manufacture, compounding, assembling or treatment of articles or merchandise from previously prepared materials such as, but not limited to: bone, canvas, cellophane, cloth, cork, elastomers, feathers, felt, fiber, fur, glass, hair, horn, leather, paper, plastics, rubber, precious or semi-precious metals or stones, sheet metal, shell, textiles, tobacco, wax, wire, wood and yarns 4. The manufacture of pottery and figurines or other similar ceramic products 5. Manufacture of musical instruments, toys, novelties, metal or rubber stamps and molded rubber products 6. Manufacture or assembly of electrical appliances, electronic instruments and devices, radios and phonographs 7. Laboratories including experimental, film or testing 8. Manufacturing and repair of electric or neon signs, light sheet metal products, including heating and ventilating equipment, cornices, eaves and the like 9. Central dry cleaning plants or laundries, provided that such plants shall not deal directly with the consumer at retail 10. All public utilities including buildings, necessary structures, storage yards and other related uses	P

	Table of Permitted Uses	I-1
	Accessory structures as provided in Section 3.02	P
	Any use charged with the principal function of basic research, design and pilot or experimental product development. Such uses shall be conducted within a completely enclosed building, except those uses which, by their nature, require outside testing	P
	Auto engine and body repair and undercoating shops when completely enclosed, provided they meet the Conditional Use Requirements in Section 8.06	P
	Borrow pits ***(93-04 Eff. June 19, 1993)***	P
	Communication Towers and Antennas ***(01-02 Eff. October 4, 2001)***	SLU
	Crematories ***(08-02 Eff. April 19, 2008)***	SLU
	Greenhouses	P
	Heating and electric power generating plants and all necessary uses	P
	Kennels	SLU
	Lumber and planing mills when completely enclosed, provided they meet the Conditional Use Requirements of Section 8.06	P
	Meat processing plants	SLU
	Metal plating, buffing and polishing subject to appropriate measures to control the type of process to prevent noxious results and/or nuisances and provided they meet the Conditional Use Requirements of Section 8.06	P
	Mineral extraction industries, including sand and gravel	SLU
	Mini-warehouses	SLU
	Motor vehicle repair facilities ***(89-05 Eff. January 26, 1990)***	P
	Municipal uses such as water treatment plants, water reservoirs, sewage treatment plants and all other municipal buildings and uses, including outdoor storage	P
	Planned unit developments, including industrial parks	SLU
	Recycling drop-off sites	SLU
	Salvage yards	SLU
	Septage Waste Storage Facilities ***(10-02 Eff. August 2, 2010)***	SLU
	Solid waste disposal areas (must meet state standards), except landfills	SLU
	Storage facilities for building materials such as, but not limited to: sand, gravel, stone, lumber, storage of contractor's equipment and supplies	P
	The production, refining or storage of petroleum or other flammable liquids	P
	Trade or industrial schools	P
	Warehouse, storage, transfer, electric and gas service buildings and yards. Public utility buildings, telephone exchange buildings, electrical transformer stations and substations, gas regulator stations, water and gas tank holders, railroad transfer and storage tracks and freight terminals	P

SECTION 8.03 SCHEDULE OF DISTRICT REGULATIONS *(02-04 Eff. May 1, 2002)*

Requirement		I-1
	Min. Lot Area (sq ft)	217,800
	Max. Lot Depth (ft)	-
	Min. Lot Width (ft) (A)	330
	Min. Front Yard (ft)	50
	Min. Total Side Yard (ft)	40(B)
	Min. Least One Side Yard (ft)	20(B)
	Min. Rear Yard (ft)	40(B)
	Max. Height (ft)	60
	Max. Lot Coverage (%)	-
	Min. Dwelling Area (sq ft)	-
	Min. Dwelling Width (ft)	-

A. Lot width shall be measured at the front building line. For lots with irregular shapes, the minimum horizontal distance between two side lot lines shall not be less than 75 percent of the minimum lot width. Where lot frontage is on the inside of a curve, a cul-de-sac, or similar condition, the width shall be determined as the average of the total of the front and rear lot lines.

B. No principal or accessory building in C-1, C-2, or I-1 Districts shall be closer than 60 feet to the property line of any residential use or district as provided in Section 7.06(D).

SECTION 8.04 SITE DEVELOPMENT STANDARDS

The use of land and structures within the Light Industrial District shall meet the dimensional requirements in Section 8.03 and the General Provisions in Article 3.

SECTION 8.05 ADDITIONAL REQUIREMENTS

A. All uses permitted in the Light Industrial District shall meet the requirements of Section 7.06.

B. That portion of land used for open storage facilities for materials or equipment shall be totally screened from view on those sides abutting agricultural, residential or commercial districts and on any front yard abutting public thoroughfare. The extent of such screening may be determined by the planning commission on the basis of usage and shall be in conformance with Section 3.23.

C. If deemed necessary by the zoning administrator the applicant shall sign an agreement that the use of the property will meet the following performance standards, or that any violation of these standards in subsequent operations will be corrected, the costs of inspection by experts for compliance to be borne by the applicant: ***(08-09 Eff. October 25, 2008)***

1. All activities shall be carried on only in buildings conforming to the building code, and the operation shall be carried on in such a manner and with such precaution against fire and explosion hazards as to produce no explosion hazards as determined by the Michigan Department of Labor to a use on an adjacent property. Flammable liquids other than fuels used for heating shall be stored in an entirely enclosed building which shall be used for no other purpose, or in underground tanks provided said storage buildings is not closer than 100 feet to any building occupied by one or more persons.

2. There shall be no emission of any smoke, atomic radiation, fumes, gas, dust, odors, or any other atmospheric pollutant which will disseminate beyond the boundaries of the lot occupied by such use in such a manner as to create a public nuisance.

3. The discharge of untreated industrial waste is prohibited. No effluent shall contain any acids, oils, dust, toxic metals, corrosives or other toxic substance in solution or suspension which would create odors, or discolor, poison or otherwise pollute the surface or groundwater in any way. ***(89-05 Eff. January 26, 1990)***

4. There shall be no vibration which is discernible to the human senses beyond the property line of the site on which such use is conducted.

5. There shall be no noise emanating from the operation which will be more audible beyond the boundaries of the site than the volume of traffic noise on the nearest adjacent street.

6. There shall be no direct or sky-reflected glare exceeding 1-1/2 foot candles or which would be damaging to the human eye measured at the property line of the lot occupied by such use. This regulation shall not apply to lights used at the entrance or exit of service drives leading to a parking lot. Exterior lighting sources shall be directed away from any neighboring residential district.

SECTION 8.06 CONDITIONAL USE REQUIREMENTS

All uses referred to this section shall also meet the following Conditional Use Requirements:

A. Minimum lot size shall be five acres.

B. Minimum required front setback for all buildings shall be 50 feet.

C. No use of this type shall be permitted within 1,000 feet of any residential district.

D. The site shall abut and have direct access to an arterial street.

SECTION 8.07 OFF-STREET PARKING AND LOADING

A. SCOPE

In all zoning districts, off-street parking facilities for the parking of self-propelled motor vehicles for the use of occupants, employees and patrons of the buildings hereafter erected, altered or extended after the effective date of this ordinance, shall be provided as herein prescribed.

B. MEASUREMENT UNITS

For the purpose of determining the off-street parking and loading facilities required as accessory to a use, definitions and standards are established as follows:

1. Off-street Parking Area: An open or enclosed area directly accessible from a public or private street for parking of automobiles of owners, occupants, employees, customers or tenants of the main use. Each space shall be directly accessible from a drive or aisle.

2. Usable Floor Area (UFA): Used in determining parking requirements, usable floor area shall mean the total area of all the floors of the building used by the principal activities as specified in the Parking Schedule, measured from the exterior faces of the building. The areas used for storage, mechanical equipment, stairwells or otherwise not occupied by people shall be excluded from the floor area calculation.

3. Gross Floor Area (GFA): Used in determining loading requirements, gross floor area means the total floor area used for the main and accessory activities and storage areas of the building served.

4. Seating Capacity: The number of seating units installed or indicated on plans for places of assembly; where not indicated on plans, it shall be assumed that a seating unit will occupy six square feet of floor area exclusive of all aisles; where benches, pews or other similar seating is provided, each 20 inches of such seating shall be counted as one seat.

5. Employees: Wherever the parking requirements are based on employees, it shall mean the maximum number of employees on duty on the premises at one time or on any two successive shifts, whichever is the greater.

6. Off-street Loading Space. An open space or enclosed area as part of a building directly accessible to a public street and available whenever needed for the loading or unloading of goods and products to the main use.

C. REQUIRED PARKING FACILITIES

The zoning administrator shall determine the minimum number of spaces required for accessory off-street parking by applying the schedule of parking requirements for the various uses and any other applicable provisions of this ordinance. Where the computation results in a fractional space, it shall be counted as one additional space required. The planning commission may vary the parking requirements of this article where it finds that due to the nature of the particular use, said requirements will not be adequate to provide sufficient parking or where the strict application of the requirements will result in an excess amount of parking related to the particular use. ***(08-09 Eff. October 25, 2008)***

D. SCHEDULE OF PARKING REQUIREMENTS

The number of off-street parking spaces required by type of use shall be determined in accordance with the following schedule.

Use	Parking Requirement Spaces per unit of measurement
Residential	
One and two family dwellings	2 Per dwelling unit
Multiple family, townhouses, Manufactured homes ***(08-03 Eff. June 2, 2008)***	2 Per dwelling unit
Bed and breakfasts	1 Per rented room plus 2 for resident family
Fraternities, Sororities	1 Per each bed
Institutional	
Child care center, day nurseries, nursery schools	1 Per 400 sq. ft. UFA plus 1 Per each employee
Churches	1 Per four (4) seats
Schools	1 Per teacher plus 1 Per employee plus 1 Per each four (4) high School students
Libraries, museums, public office buildings, post offices	1 Per 800 sq. ft. UFA plus 1 Per each two (2) employees
Private clubs or lodges	1 Per three (3) members allowed by law
Public golf courses	6 Per hole plus 1 Per employee
Private golf, tennis swim clubs	1 Per two (2) member families or individual membership
Theaters, auditoriums, assembly halls	1 Per four (4) seats
Hospitals and nursing homes	1 Per each four (4) beds plus 1 Per each staff doctor plus 1 Per each two (2) employees
Public outdoor recreation facilities	1 Per each four (4) seats or eight (8) feet of benches plus 10 Per each one (1) acre of undesignated area
Businesses	
Animal hospitals and kennels	1 Per each 400 sq. ft. UFA plus 1 Per each two (2) employees
Auto salesrooms, and automobile service garages	1 Per each 200 sq. ft. UFA plus 1 Per each service stall
Automobile wash establishments	4 Per each unit (computed by dividing the line dimension of the operation by 20; for in-line waiting lanes) plus 1 Per each Employee
Beauty or barber shops	1 Per each three (3) beauty or barber chairs plus 1 Per each employee
Bowling alleys	5 Per bowling lane

Use	Parking Requirement Spaces per unit of measurement
Dance halls, exhibition halls, pool halls, and assembly halls without fixed seats	1 Per each two (2) persons within the maximum occupancy load
Drive-in restaurants or similar drive-in uses for of food, beverages or refreshments	1 Per each 50 sq. ft. UFA (for in-line waiting lanes), plus 1 Per each three (3) employees, with a minimum total of 20 parking spaces
Furniture, appliances and household equipment, repair shops, hardware stores and other similar uses	1 Per each 800 sq. ft. UFA plus 1 Per each two (2) employees
Laundromats, coin operated dry cleaning establishment	1 Per each three (3) washing machines
Miniature or "Par 3" golf courses	3 Per each hole plus 1 Per each employee
Mortuary establishments	1 Per each 25 sq. ft. assembly room
Motels and hotels	1 Per each guest bedroom, plus 1 Per each employee
Restaurants and other establishments (other than drive-in restaurants) in which is conducted the sale and consumption on the premises of food, beverages or refreshments	1 Per each 75 sq. ft. UFA plus 1 Per each three (3) bar seats
Retail stores, mixed commercial uses or personal service establishments, except as otherwise specified herein	1 Per each 200 sq. ft. UFA
Offices	
Banks (other than drive-in banks) and business and professional offices	1 Per each 100 sq. ft. UFA
Drive-in banks	3 Per each teller window (in-line waiting lanes) plus 1 Per each employee
Medical clinics and dental clinics	3 Per each staff or visiting doctor plus 1 Per each employee
Industry	
Industrial or manufacturing establishments, research establishments, warehouses and storage buildings	1 Per each two (2) employees (or) 1 Per each 1,500 sq. ft. GFA (whichever is greater)

E. PARKING AND DRIVEWAY PLANS

Any person desiring to establish or change a driveway or parking area, except for farming or residential purposes, shall submit plans to the zoning administrator showing the location size, shape, design, landscaping, surface marking, lighting, drainage, curb cuts, entrances, exits and any other features of the driveways and parking lot. Plans

shall be approved by the county planning commission who may request the advice and comment of the county engineer. All nonresidential and multiple family dwelling parking areas and driveways shall be designed to: ***(08-09 Eff. October 25, 2008)***

1. Provide convenient and safe automobile circulation and parking in relation to streets, pedestrian walkways and adjoining properties or parking areas.

2. Insure adequate visual sight distances.

3. Minimize conflicts of traffic movements on public streets.

4. Insure the safety, convenience and well being of adjoining property owners and the public.

F. PLANS FILED

All approved plot or development plans for parking areas shall be signed and kept on file by the zoning administrator ***(08-09 Eff. October 25, 2008)***.

G. LOCATION OF PARKINGS

In residential districts, all required parking areas shall be provided on the same lot with the principal use. In C-1 or C-2 Districts required parking shall be provided within 300 feet walking distance of the principal building and within 500 feet of the principal building in I-1 Districts. The planning commission may have the discretion to waive or amend this requirement in special circumstances.

H. COMMUNITY PARKING

Where a property owner participates or has participated in the cost of a public area, it shall be stated on plans as required by Section 8.07(E).

I. MINIMUM STANDARDS

Every off street parking, loading or driveway area hereafter enlarged, altered or constructed, shall be developed and maintained in accordance with the following.

1. Surfacing. These areas shall be surfaced with durable material and graded and drained to dispose of all surface water to the nearest storm drain or street or as required by the county engineer. Acceptable materials are asphalt and concrete.

2. Driveways. Driveways in commercial or industrial districts shall be no closer than 20 feet to a property zoned or used for residential purpose.

3. Parking in Front Yard. Off-street parking areas in commercial or industrial districts shall be permitted to occupy a portion of the required front yard, provided that there shall be maintained a landscaped area of 10 feet between the parking area and the road right-of-way.

4. Screening. All driveway and parking areas in commercial or industrial districts shall be effectively screened from any property zoned or used for residential purposes in accordance with Section 3.23.

5. Curbing. Curbing or similar physical barriers shall be provided at the edges of all parking areas to protect required yards and pedestrians.

6. Lighting. Lighting shall be reflected down and away from any residential property or public street.

7. Area. The minimum area of a parking space shall be 180 square feet except that such space shall be at least 250 square feet for spaces required for handicapped parking.

8. Landscaping. All parking areas containing 20 or more parking spaces shall have a minimum of 10% of the surface area landscaped as required by the planning commission.

J. JOINT USE OF PARKING FACILITIES

1. The joint use of parking facilities by two or more uses is encouraged whenever practical and satisfactory to each of the uses to be served. A reduction of individual parking requirements may be permitted by the planning commission in cases where neighboring uses have significantly different hours of operation from each other. However, each use shall provide a minimum of 50% of its individual off-street parking requirements.

2. Prior to approving any request for joint use of parking facilities, the planning commission shall consider:

   a. the location, number and spacing of driveways;

   b. the use of landscaping to soften the visual impact of the parking lot;

   c. internal circulation patterns and access to all participating uses; and

   d. potential conflicts among users and changes in parking demand.

3. The planning commission may require, as a condition of approval, a copy of an agreement among participants to share parking facilities. Such

agreement shall specify the time period for which such arrangement is agreed to.

K. OFF-STREET LOADING REQUIREMENTS

On the same premises with every building or part thereof, erected and occupied for manufacturing, storage, warehouse, good display, department store, wholesale, market, hospital, laundry, dry cleaning or other uses similarly involving the receipt or distribution of vehicles, material or merchandise, there shall be provided and maintained on the lot adequate space for standing, loading and unloading services in order to avoid undue interference with street or parking areas. In C-1, C-2 and I-1 Districts, such space shall be provided for any new building hereafter erected or enlarged, regardless of the intended use.

1. Such loading and unloading space, shall be at least 12 feet in width, 50 feet in length and accessible from a street, alley or private drive.

2. Such spaces shall be provided according to the following schedule:

Gross Floor Area in Square Feet	Loading and Unloading Spaces Required
0-10,000	One space
Each additional 20,000	One additional space

3. Off-street loading space area shall not be construed as, or counted towards, the supplying of area required as off-street parking space area.

SECTION 8.08 SIGNS *(11-03 Eff. January 30, 2012)*

A. The following signs are permitted in the Industrial District and require a zoning permit prior to installation:

1. One (1) freestanding sign of up to 80 square feet for all authorized uses. Sign shall be placed no closer than ten (10) feet any lot line. A monument sign shall not exceed ten (10) feet in height. All other freestanding signs shall not exceed twenty (20) feet in height.

2. Wall signs for all authorized uses. The total sign area shall not exceed one (1) square foot for each foot in length or height of the wall, whichever is greater, to which it is affixed.

3. One (1) billboard structure is permitted and regulated as follows:

   a. No billboard shall be located within 250’ of a property line of an adjacent residential district or use.

b. Billboard structure may contain one billboard facing each direction of traffic and the maximum size of each billboard shall be 300 square feet.

c. Maximum height of a billboard shall be 35 feet above average grade.

d. Billboard structure shall not be permitted adjacent to or within 500 feet of an interchange. The 500 feet shall be measured from the point of beginning or ending of pavement widening at the exit from, or entrance to, the main-traveled way.

e. No billboard shall be permitted on a lot that has any existing buildings, structures or signs. No further buildings, structures or signs shall be permitted on the lot until the billboard has been completely removed.

f. No billboard shall be constructed or erected on a lot so as to obstruct the view of adjacent buildings or signs.

g. No billboard shall be constructed to obstruct the clear vision area of a road or intersection that results in a traffic hazard or interferes with the safe ingress and egress of a parcel.

h. Billboards shall meet all building setback requirements for the district in which they are located.

i. Billboards adjacent to a State Highway may be illuminated meeting the requirements of the Highway Advertising Act, PA 106 of 1972 as amended. All other billboards shall not be illuminated.

B. The following signs do not require a zoning permit:

1. On-site political campaign signs, provided they are removed within 10 days after the election to which they pertain.

2. Non-illuminated Real Estate signs of up to eight (8) square feet, provided they are removed within 10 days after consummation of lease or sale of property.

3. Non-illuminated trespassing, safety, directional, caution or announcement signs each not exceeding two (2) square feet in area or signs announcing the sale of produce each not exceeding six (6) square feet in area.

4. Name plates.

5. Signs that have been approved in conjunction with a valid zoning permit for any principal use as detailed in a plot plan or site plan.

6. Road name signs and other signs established by state, county, or township units of government when necessary for giving proper directions or otherwise safeguarding the public in any district.

7. Non-advertising signs erected by any organization, person, firm, or corporation that are needed to warn the public of dangerous conditions and unusual hazards including: caving ground, drop-offs, high voltage, fire danger, explosives, severe visibility limits, etc., in any districts.

C. The following signs are prohibited:

1. A sign resembling the flashing lights customarily used in traffic signals, or police, fire, ambulance, or rescue vehicle or signs which imitate official traffic directional signs or devices.

2. Illuminated signs where the source of light is directed in a manner where light is shining directly onto traffic or neighboring properties.

3. A sign using the words, “Stop”, “Danger”, or any other words, phrases, symbols, or characters, in such a manner as to interfere with, mislead, or confuse a vehicle driver.

4. Signs on parked vehicles where the sign is the primary use of the vehicle.

5. Off premise signs, except billboards

6. Signs greater than two (2) square feet that are affixed to trees, shrubs or similar natural features.

7. Signs affixed to fences or utility poles or structural elements not capable of supporting such signs.

8. Any sign which obstructs the ingress or egress from a required door, window, or other required exit.

9. Signs and advertising devices including banners, balloons, flags, pennants, pinwheels, searchlights, inflatable devices or any other sign or device with similar characteristics, except when used temporarily for periods not to exceed thirty (30) days within any six (6) month period.

10. Signs containing words, lettering, silhouettes, drawings or pictorial representation that are of a sexual explicit nature.

11. Signs placed within the road right-of-way.

12. Signs that obstruct the clear vision area of a road that results in a traffic hazard or interferes with the safe ingress and egress of a parcel.

13. Electronic message boards, except those which display only the date, time, temperature or the price of a product sold on the property, and except billboards that meet the requirements of the Highway Advertising Act, PA 106 of 1972 as amended.

14. Signs containing flashing, intermittent or moving lights.

15. Signs with moving or revolving parts.

16. Wall signs that project above the roof line or cornice

D. Signs which no longer advertise an existing business or service establishment must be removed by the owner within 30 days after written notification from the Zoning Administrator.

ARTICLE 9
(C-I) COMMERCIAL-INDUSTRIAL PLANNED UNIT DEVELOPMENT (PUD) DISTRICT

SECTION 9.01 DESCRIPTION AND PURPOSE

The purpose of this district is to allow for flexibility in design of commercial or industrial areas. It is designed to accomplish the objectives of the zoning ordinance through a review process to achieve integration of the proposed development with the character of the area.

The objectives of this district are to permit flexibility in the regulation of land development; encourage innovation in land use and variety in design, layout and type of structures constructed; achieve economy and efficiency in the use of land, natural resources, energy and the provision of public services and utilities; encourage provision of useful open space; and provide employment and shopping opportunities.

This district is intended to accommodate developments with mixed or varied uses, sites with unusual topography or unique settings within the community, or on land which exhibits difficult or costly development problems. Planned developments shall not be allowed where the intended use is primarily to avoid the imposition of standards and requirements of other zoning classifications rather than to achieve the stated purposes of this section.

SECTION 9.02 PERMITTED USES

The following abbreviations apply to the Table of Permitted Uses for the (C-I), Commercial–Industrial Planned Unit Development (PUD) District:

P: Permitted Use: Land and/or buildings in this District may be used for the purposes listed by right.

SLU: Special Land Use: The following uses may be permitted by obtaining Special Land Use approval when all applicable standards cited in Article 12 are met.

NP: Not Permitted: The use is not permitted in the District.

Table of Permitted Uses		I-1
	All uses permitted by right in the C-1 and I-1 Districts	P
	Golf course and country clubs	P
	Recycling Drop-off Sites ***(92-08 Eff. January 21, 1993)***	P

SECTION 9.03 SITE DEVELOPMENT STANDARDS

A. The provisions of this article shall apply only to a tract of land with a minimum area of ten acres, which tract is under single ownership or proof of control through option to purchase or easement agreement.

B. Total ground area occupied by all buildings and structures shall not exceed 35% of the total ground area of the PUD. The total ground area shall include public and private rights of way.

C. No building shall exceed 35 feet in height.

D. No building, structure or parking area may be erected closer than 50 feet from any Residential District, provided that the planning commission may determine that a greater setback, not to exceed 100 feet, shall be required.

E. Planted or landscaped buffer areas of 30 feet in width meeting the requirements of Section 3.23 shall be required along all front yards and along any property line abutting a residential use or district. Landscaping shall be provided so as to insure that proposed uses will be adequately buffered from one another and from surrounding lower density uses.

F. Off-street parking is required pursuant to Section 9.10. A minimum of 10% of the parking area shall be landscaped. The joint use of parking facilities by two or more uses is encouraged whenever practical and satisfactory to each of the uses to be served.

G. PUD's shall be designed to enhance environmental features such as the preservation of trees, flood plains, natural areas and shall promote proper site landscaping.

H. Standards for circulation of traffic shall be specified by the Isabella County Road Commission. This shall include the relationship of internal circulation systems to external collectors and arterials, as well as the relationships of streets to structures. This shall also include standards governing private streets.

I. Standards for public utilities shall vary due to geographical area and existing soil of proposed PUD's. The Central Michigan District Health Department and the planning commission shall establish and maintain standards for public utilities.

J. The stages of a PUD shall be so scheduled that, if later stages of the development are not implemented, the initial stage(s) shall be consistent with the provisions of this article and shall not detract from the feasibility of developing the remaining portion of the subject PUD area in an appropriate and desirable manner.

SECTION 9.04 PREAPPLICATION CONFERENCE

A. Before submitting an application for approval of a PUD, the applicant shall confer in a meeting with a review committee appointed by the planning commission to obtain information and guidance regarding land development regulations, the county's comprehensive plan and the application process. At the preapplication conference, the applicant shall submit a preliminary sketch plan for the proposed PUD. All maps shall show enough of the surrounding area to demonstrate the relationship of the PUD to adjoining uses, both existing and proposed. The review committee shall review the preliminary sketch plan to determine its conformance with the intent of this article and the county's comprehensive plan.

B. The maps which are a part of the preliminary sketch plan maybe in general schematic form and must contain the following:

1. A recent map of the site, reflecting area size and boundary line dimensions.

2. Existing and proposed land uses and their approximate locations.

3. Existing topographic character of the site.

4. Circulation patterns including pedestrian walkways and arterial, collector or local streets.

5. Existing floodplains, bodies of water and other unbuildable areas.

SECTION 9.05 FINAL APPLICATION

A request for a PUD district shall be in the form of an application for rezoning, or in the case of an existing PUD district, shall be in the form of a site plan approval. Such application shall include a site plan in accordance with Article 11. A request for a PUD district re-zoning shall follow the below procedure.

A. Following receipt of an application for PUD zoning, the planning commission shall hold a public hearing in accordance with statutory requirements. At the public hearing or within a reasonable time thereafter, the planning commission shall meet for final consideration of the request, and recommend to the county board denial, approval or approval with conditions of the request. The following standards shall be used in consideration of an application for PUD zoning:

1. Whether the proposed use will be harmonious with, and not harmful, injurious or detrimental to existing and anticipated uses in the area.

2. Whether the proposed plan will endanger the safety or impair the health of the residents of the vicinity.

3. Whether the proposed plan will be adequately served by necessary facilities and services, including but not limited to water, sewer, roads, fire protection, police service and drainage.

B. The planning commission shall prepare a report stating its conclusions on the request, the decision, the basis for its decision and any condition relating to an affirmative decision. Said report shall be transmitted to the applicant and to the county board for consideration in making a final decision.

C. The county board shall review the application, the final development plan and the report of the planning commission, and shall deny, approve or approve with conditions the requested zoning. The adoption of the plan shall be considered an integral part of the zoning ordinance.

SECTION 9.06 CONDITIONS

Reasonable conditions may be imposed with approval of a PUD plan. The conditions may include those necessary to insure that public services and facilities will be capable of accommodating increased service and facility loads caused by the proposed land use or activity, to protect the natural environment and conserve natural resources and energy, to insure compatibility with adjacent uses of land and to promote the use of land in a socially and economically desirable manner. Conditions imposed shall meet all the following requirements:

A. Be designed to protect natural resources, the health, safety and welfare, and the social and economic well-being of those who will exercise the land use or activity under consideration, residents and landowners immediately adjacent to the proposed land use or activity, and the community as a whole.

B. Be related to the valid exercise of the police power.

C. Be necessary to meet the intent and purpose of the zoning ordinance, be related to any standards established in the ordinance for the land use or activity under consideration, and be necessary to ensure compliance with those standards.

D. The conditions imposed shall be recorded in the record of the approval action and shall remain unchanged except as provided by law.

SECTION 9.07 AMENDMENTS TO PLAN

A. Following approval of the PUD site plan by the county board or planning commission, no change in the plan shall be made without planning commission approval. Approval to a change in the plan which conforms to the zoning ordinance may be granted by the mutual agreement of the landowner and the

planning commission. No change authorized by this subsection shall cause any of the following:

1. A change in the use or character of the development;

2. An increase in the overall coverage of structures;

3. A decrease in the setback between structures or parking areas in the PUD and adjacent residential structures.

B. If the planning commission does not approve such change in the plan, the landowner may seek approval of the proposed change in accordance with the procedures established in Section 9.05.

SECTION 9.08 BOARD OF APPEALS

The Board of Appeals is without jurisdiction to accept appeals or grant variances from the regulations of the PUD District.

SECTION 9.09 PERFORMANCE BONDS

Performance bonds relating to the PUD may be used to ensure that necessary facilities are constructed and conditions are met. These bonds may coincide with a phasing program. Both the phasing program and performance bonds shall be established by the planning commission.

SECTION 9.10 OFF-STREET PARKING AND LOADING

A. SCOPE

In all zoning districts, off-street parking facilities for the parking of self-propelled motor vehicles for the use of occupants, employees and patrons of the buildings hereafter erected, altered or extended after the effective date of this ordinance, shall be provided as herein prescribed.

B. MEASUREMENT UNITS

For the purpose of determining the off-street parking and loading facilities required as accessory to a use, definitions and standards are established as follows:

1. Off-street Parking Area: An open or enclosed area directly accessible from a public or private street for parking of automobiles of owners, occupants, employees, customers or tenants of the main use. Each space shall be directly accessible from a drive or aisle.

2. Usable Floor Area (UFA): Used in determining parking requirements, usable floor area shall mean the total area of all the floors of the building used by the principal activities as specified in the Parking Schedule, measured from the exterior faces of the building. The areas used for storage, mechanical equipment, stairwells or otherwise not occupied by people shall be excluded from the floor area calculation.

3. Gross Floor Area (GFA): Used in determining loading requirements, gross floor area means the total floor area used for the main and accessory activities and storage areas of the building served.

4. Seating Capacity: The number of seating units installed or indicated on plans for places of assembly; where not indicated on plans, it shall be assumed that a seating unit will occupy six square feet of floor area exclusive of all aisles; where benches, pews or other similar seating is provided, each 20 inches of such seating shall be counted as one seat.

5. Employees: Wherever the parking requirements are based on employees, it shall mean the maximum number of employees on duty on the premises at one time or on any two successive shifts, whichever is the greater.

6. Off-street Loading Space. An open space or enclosed area as part of a building directly accessible to a public street and available whenever needed for the loading or unloading of goods and products to the main use.

C. REQUIRED PARKING FACILITIES

The zoning administrator shall determine the minimum number of spaces required for accessory off-street parking by applying the schedule of parking requirements for the various uses and any other applicable provisions of this ordinance. Where the computation results in a fractional space, it shall be counted as one additional space required. The planning commission may vary the parking requirements of this article where it finds that due to the nature of the particular use, said requirements will not be adequate to provide sufficient parking or where the strict application of the requirements will result in an excess amount of parking related to the particular use. ***(08-09 Eff. October 25, 2008)***

D. SCHEDULE OF PARKING REQUIREMENTS

The number of off-street parking spaces required by type of use shall be determined in accordance with the following schedule.

Use	Parking Requirement Spaces per unit of measurement
Residential	
One and two family dwellings	2 Per dwelling unit
Multiple family, townhouses, Manufactured homes ***(08-03 Eff. June 2, 2008)***	2 Per dwelling unit
Bed and breakfasts	1 Per rented room plus 2 for resident family
Fraternities, Sororities	1 Per each bed
Institutional	
Child care center, day nurseries, nursery schools	1 Per 400 sq. ft. UFA plus 1 Per each employee
Churches	1 Per four (4) seats
Schools	1 Per teacher plus 1 Per employee plus 1 Per each four (4) high School students
Libraries, museums, public office buildings, post offices	1 Per 800 sq. ft. UFA plus 1 Per each two (2) employees
Private clubs or lodges	1 Per three (3) members allowed by law
Public golf courses	6 Per hole plus 1 Per employee
Private golf, tennis swim clubs	1 Per two (2) member families or individual membership
Theaters, auditoriums, assembly halls	1 Per four (4) seats
Hospitals and nursing homes	1 Per each four (4) beds plus 1 Per each staff doctor plus 1 Per each two (2) employees
Public outdoor recreation facilities	1 Per each four (4) seats or eight (8) feet of benches plus 10 Per each one (1) acre of undesignated area
Businesses	
Animal hospitals and kennels	1 Per each 400 sq. ft. UFA plus 1 Per each two (2) employees
Auto salesrooms, and automobile service garages	1 Per each 200 sq. ft. UFA plus 1 Per each service stall
Automobile wash establishments	4 Per each unit (computed by dividing the line dimension of the operation by 20; for in-line waiting lanes) plus 1 Per each Employee
Beauty or barber shops	1 Per each three (3) beauty or barber chairs plus 1 Per each employee
Bowling alleys	5 Per bowling lane

Use	Parking Requirement Spaces per unit of measurement
Dance halls, exhibition halls, pool halls, and assembly halls without fixed seats	1 Per each two (2) persons within the maximum occupancy load
Drive-in restaurants or similar drive-in uses for of food, beverages or refreshments	1 Per each 50 sq. ft. UFA (for in-line waiting lanes), plus 1 Per each three (3) employees, with a minimum total of 20 parking spaces
Furniture, appliances and household equipment, repair shops, hardware stores and other similar uses	1 Per each 800 sq. ft. UFA plus 1 Per each two (2) employees
Laundromats, coin operated dry cleaning establishment	1 Per each three (3) washing machines
Miniature or "Par 3" golf courses	3 Per each hole plus 1 Per each employee
Mortuary establishments	1 Per each 25 sq. ft. assembly room
Motels and hotels	1 Per each guest bedroom, plus 1 Per each employee
Restaurants and other establishments (other than drive-in restaurants) in which is conducted the sale and consumption on the premises of food, beverages or refreshments	1 Per each 75 sq. ft. UFA plus 1 Per each three (3) bar seats
Retail stores, mixed commercial uses or personal service establishments, except as otherwise specified herein	1 Per each 200 sq. ft. UFA
Offices	
Banks (other than drive-in banks) and business and professional offices	1 Per each 100 sq. ft. UFA
Drive-in banks	3 Per each teller window (in-line waiting lanes) plus 1 Per each employee
Medical clinics and dental clinics	3 Per each staff or visiting doctor plus 1 Per each employee
Industry	
Industrial or manufacturing establishments, research establishments, warehouses and storage buildings	1 Per each two (2) employees (or) 1 Per each 1,500 sq. ft. GFA (whichever is greater)

E. PARKING AND DRIVEWAY PLANS

Any person desiring to establish or change a driveway or parking area, except for farming or residential purposes, shall submit plans to the zoning administrator showing the location size, shape, design, landscaping, surface marking, lighting, drainage, curb cuts, entrances, exits and any other features of the driveways and parking lot. Plans shall be approved by the county planning commission who may request the advice and

comment of the county engineer. All nonresidential and multiple family dwelling parking areas and driveways shall be designed to: ***(08-09 Eff. October 25, 2008)***

1. Provide convenient and safe automobile circulation and parking in relation to streets, pedestrian walkways and adjoining properties or parking areas.

2. Insure adequate visual sight distances.

3. Minimize conflicts of traffic movements on public streets.

4. Insure the safety, convenience and well being of adjoining property owners and the public.

F. PLANS FILED

All approved plot or development plans for parking areas shall be signed and kept on file by the zoning administrator ***(08-09 Eff. October 25, 2008)***.

G. LOCATION OF PARKINGS

In residential districts, all required parking areas shall be provided on the same lot with the principal use. In C-1 or C-2 Districts required parking shall be provided within 300 feet walking distance of the principal building and within 500 feet of the principal building in I-1 Districts. The planning commission may have the discretion to waive or amend this requirement in special circumstances.

H. COMMUNITY PARKING

Where a property owner participates or has participated in the cost of a public area, it shall be stated on plans as required by Section 9.10 (E).

I. MINIMUM STANDARDS

Every off street parking, loading or driveway area hereafter enlarged, altered or constructed, shall be developed and maintained in accordance with the following.

1. Surfacing. These areas shall be surfaced with durable material and graded and drained to dispose of all surface water to the nearest storm drain or street or as required by the county engineer. Acceptable materials are asphalt and concrete.

2. Driveways. Driveways in commercial or industrial districts shall be no closer than 20 feet to a property zoned or used for residential purpose.

3. Parking in Front Yard. Off-street parking areas in commercial or industrial districts shall be permitted to occupy a portion of the required front yard,

provided that there shall be maintained a landscaped area of 10 feet between the parking area and the road right-of-way.

4. Screening. All driveway and parking areas in commercial or industrial districts shall be effectively screened from any property zoned or used for residential purposes in accordance with Section 3.23.

5. Curbing. Curbing or similar physical barriers shall be provided at the edges of all parking areas to protect required yards and pedestrians.

6. Lighting. Lighting shall be reflected down and away from any residential property or public street.

7. Area. The minimum area of a parking space shall be 180 square feet except that such space shall be at least 250 square feet for spaces required for handicapped parking.

8. Landscaping. All parking areas containing 20 or more parking spaces shall have a minimum of 10% of the surface area landscaped as required by the planning commission.

J. JOINT USE OF PARKING FACILITIES

1. The joint use of parking facilities by two or more uses is encouraged whenever practical and satisfactory to each of the uses to be served. A reduction of individual parking requirements may be permitted by the planning commission in cases where neighboring uses have significantly different hours of operation from each other. However, each use shall provide a minimum of 50% of its individual off-street parking requirements.

2. Prior to approving any request for joint use of parking facilities, the planning commission shall consider:

   a. the location, number and spacing of driveways;

   b. the use of landscaping to soften the visual impact of the parking lot;

   c. internal circulation patterns and access to all participating uses; and

   d. potential conflicts among users and changes in parking demand.

3. The planning commission may require, as a condition of approval, a copy of an agreement among participants to share parking facilities. Such agreement shall specify the time period for which such arrangement is agreed to.

K. OFF-STREET LOADING REQUIREMENTS

On the same premises with every building or part thereof, erected and occupied for manufacturing, storage, warehouse, good display, department store, wholesale, market, hospital, laundry, dry cleaning or other uses similarly involving the receipt or distribution of vehicles, material or merchandise, there shall be provided and maintained on the lot adequate space for standing, loading and unloading services in order to avoid undue interference with street or parking areas. In C-1, C-2 and I-1 Districts, such space shall be provided for any new building hereafter erected or enlarged, regardless of the intended use.

1. Such loading and unloading space, shall be at least 12 feet in width, 50 feet in length and accessible from a street, alley or private drive.

2. Such spaces shall be provided according to the following schedule:

Gross Floor Area in Square Feet	Loading and Unloading Spaces Required
0-10,000	One space
Each additional 20,000	One additional space

3. Off-street loading space area shall not be construed as, or counted towards, the supplying of area required as off-street parking space area.

SECTION 9.11 SIGNS *(11-03 Eff. January 30, 2012)*

A. The following signs are permitted in the Commercial-Industrial PUD District and require a zoning permit prior to installation:

1. One (1) freestanding sign for a shopping center. The total sign area shall not exceed one (1) square foot for each foot of building frontage. The maximum size of a sign is two hundred (200) square feet. Sign shall be placed no closer than ten (10) feet to any lot line. A monument sign shall not exceed ten (10) feet in height. All other freestanding signs shall not exceed twenty (20) feet in height.

2. One (1) freestanding sign of up to 80 square feet for all other authorized uses. Sign shall be placed no closer than ten (10) feet to any lot line. A monument sign shall not exceed ten (10) feet in height. All other freestanding signs shall not exceed twenty (20) feet in height.

3. Wall signs for all authorized uses. The total sign area shall not exceed one (1) square foot for each foot in length or height of the wall, whichever is greater, to which it is affixed.

4. One (1) billboard structure is permitted and regulated as follows:

a. No billboard shall be located within 250' of a property line of an adjacent residential district or use.

b. Billboard structure may contain one billboard facing each direction of traffic and the maximum size of each billboard shall be 300 square feet.

c. Maximum height of a billboard shall be 35 feet above average grade.

d. Billboard structure shall not be permitted adjacent to or within 500 feet of an interchange. The 500 feet shall be measured from the point of beginning or ending of pavement widening at the exit from, or entrance to, the main-traveled way.

e. No billboard shall be permitted on a lot that has any existing buildings, structures or signs. No further buildings, structures or signs shall be permitted on the lot until the billboard has been completely removed.

f. No billboard shall be constructed or erected on a lot so as to obstruct the view of adjacent buildings or signs.

g. No billboard shall be constructed to obstruct the clear vision area of a road or intersection that results in a traffic hazard or interferes with the safe ingress and egress of a parcel.

h. Billboards shall meet all building setback requirements for the district in which they are located.

i. Billboards adjacent to a State Highway may be illuminated meeting the requirements of the Highway Advertising Act, PA 106 of 1972 as amended. All other billboards shall not be illuminated.

B. The following signs do not require a zoning permit:

1. On-site political campaign signs, provided they are removed within 10 days after the election to which they pertain.

2. Non-illuminated Real Estate signs of up to eight (8) square feet, provided they are removed within 10 days after consummation of lease or sale of property.

3. Non-illuminated trespassing, safety, directional, caution or announcement signs each not exceeding two (2) square feet in area or signs announcing the sale of produce each not exceeding six (6) square feet in area.

4. Name plates.

5. Signs that have been approved in conjunction with a valid zoning permit for any principal use as detailed in a plot plan or site plan.

6. Road name signs and other signs established by state, county, or township units of government when necessary for giving proper directions or otherwise safeguarding the public in any district.

7. Non-advertising signs erected by any organization, person, firm, or corporation that are needed to warn the public of dangerous conditions and unusual hazards including: caving ground, drop-offs, high voltage, fire danger, explosives, severe visibility limits, etc., in any districts.

C. The following signs are prohibited:

1. A sign resembling the flashing lights customarily used in traffic signals, or police, fire, ambulance, or rescue vehicle or signs which imitate official traffic directional signs or devices.

2. Illuminated signs where the source of light is directed in a manner where light is shining directly onto traffic or neighboring properties.

3. A sign using the words, “Stop”, “Danger”, or any other words, phrases, symbols, or characters, in such a manner as to interfere with, mislead, or confuse a vehicle driver.

4. Signs on parked vehicles where the sign is the primary use of the vehicle.

5. Off premise signs, except billboards

6. Signs greater than two (2) square feet that are affixed to trees, shrubs or similar natural features.

7. Signs affixed to fences or utility poles or structural elements not capable of supporting such signs.

8. Any sign which obstructs the ingress or egress from a required door, window, or other required exit.

9. Signs and advertising devices including banners, balloons, flags, pennants, pinwheels, searchlights, inflatable devices or any other sign or device with similar characteristics, except when used temporarily for periods not to exceed thirty (30) days within any six (6) month period.

10. Signs containing words, lettering, silhouettes, drawings or pictorial representation that are of a sexual explicit nature.

11. Signs placed within the road right-of-way.

12. Signs that obstruct the clear vision area of a road that results in a traffic hazard or interferes with the safe ingress and egress of a parcel.

13. Electronic message boards, except those which display only the date, time, temperature or the price of a product sold on the property, and except billboards that meet the requirements of the Highway Advertising Act, PA 106 of 1972 as amended.

14. Signs containing flashing, intermittent or moving lights.

15. Signs with moving or revolving parts.

16. Wall signs that project above the roof line or cornice

D. Signs which no longer advertise an existing business or service establishment must be removed by the owner within 30 days after written notification from the Zoning Administrator.

ARTICLE 10
(W-S) WATERFRONT-SHORELAND OVERLAY DISTRICT

SECTION 10.01 DESCRIPTION AND PURPOSE

The Waterfront-Shoreland District is an overlay district intended to ensure the environmental and aesthetic quality of the surface water resources and wetlands of Isabella County are protected from misuse and degradation. The Waterfront-Shoreland Zoning District includes all lands in any zoning district within the following distances of the ordinary high water mark of state's navigable waters: 1000 feet from a lake, pond or impoundment; and 300 feet from a river or stream. Waterfront-Shoreland District provisions shall apply to all lakes, ponds or impoundments greater than 24 acres in water surface and the following rivers and streams:

Chippewa River, Coldwater River, North Branch of Chippewa River, South Branch of Salt River, Pine (North and South Branch), Squaw Creek, Indian Creek and Cedar Creek. ***(89-05 Eff. January 26, 1990)***

A. The surface water resources of Isabella County are a valuable asset to the citizens of the county and the State of Michigan. The purpose of this district is to provide specific regulations which shall further the maintenance of safe and healthful conditions; prevent and control water pollution; reduce hazards to persons and damaged to property as a result of flood conditions; protect fish and other aquatic life; provide for the wise utilization of water and related land resources; and control development so as to preserve the economic and natural environmental value of shorelands.

B. It is recognized that the surface water resources of the County are a shared resource of relatively fixed supply and, thus, must be regulated in a manner which will ensure reasonable usage by riparian property owners and the general public.

C. Further, it is the intent of this Article to comply with the provisions and requirements of the National Flood Insurance Program, as constituted in accord with the National Flood Insurance Act of 1968, and subsequent enactment and the rules and regulations promulgated in furtherance of this program by the Federal Emergency Management Agency, as published in the Federal Register, Vol. 41, No. 207, Tuesday, October 26, 1976, and redesignated at 44 FR 31177, May 31, 1979.

SECTION 10.02 SITE DEVELOPMENT STANDARDS

A. Shoreland Vegetation. The cutting of trees and shrubbery shall be regulated so as to protect natural beauty, control erosion and reduce the flow of sediments and nutrients from the shoreland area.

1. A 35-foot strip bordering and adjacent to all waters within the Waterfront-Shoreland District shall be established as a “Vegetative Buffer Strip.”

2. The “Vegetative Buffer Strip” shall be maintained in grass lands, trees and shrubs or its natural state. Natural growth shall be preserved as far as practical and when removed, it shall be replaced with other vegetation that is equally effective in controlling runoff.

3. In the strip of land 35 feet wide inland from the ordinary high water mark of a lake, pond, or flowage or the full bank stage of a river or stream, not more than 30 feet in any 100 feet of frontage shall be denuded of vegetation provided such disturbance does not cause excessive erosion and sedimentation of an adjacent watercourse.

4. The tree and shrubbery cutting regulations outlined herein shall not apply to the removal of dead, diseased or dying trees or shrubs

B. Building Setback. On waterfront lots, a setback of 35 feet from the ordinary high water mark of a lake, pond, or flowage, or the full bank stage of a river or stream to the nearest part of any principal structure or building shall be required.

C. Wetlands. Wetlands shall be defined as land characterized by hydric soils and the presence of water at a frequency and duration sufficient to support wetland vegetation or aquatic life. In the absence of wetland inventory maps, the following soil types shall be considered wetlands for the purpose of this ordinance:

Pinnebog Muck, Adrian Muck, Edwards Muck, Histosols and Aquents

1. The construction of any wastewater disposal system within a wetland in the Waterfront-Shoreland District is prohibited. Raising the elevation of ground by adding fill materials to create a mounded disposal tile field is not permitted.

2. Any activity which may adversely impact a wetland is subject to review and permit approval by the Michigan Department of Natural Resources pursuant to provisions of the Wetlands Protection Act (Act 203 of 1979) and other state statutes.

D. Soil Erosion. Any earth moving operation such as grading, clear-cutting, cut and fill construction and other similar activities which may cause soil erosion and

sedimentation of the water resources of the County will conform to provisions of the Soil Erosion and Sedimentation Control Act (Act 347 pf 1972).

E. Steep Slopes. On slopes greater than 15% within the Waterfront-Shoreland District as determined by available topographic maps or field inspections, the county shall be provided evidence in writing of the following:

1. That a plan has been prepared for the disposal of stormwaters without serious erosion of top soil or impairment of slope stability and without sedimentation of any stream or water body.

2. That on-site water and wastewater disposal system have been approved by the District Health Department.

F. Canal and Channel Construction. The construction of any canal or channel or similar activity within the Waterfront-Shoreland District must be done in accordance with Michigan Department of Natural Resources rules and regulations.

1. Before any construction can commence, the county shall be provided evidence in writing that said construction activity meets all appropriate State guidelines. The written evidence will include a copy of the permit(s) which may be required pursuant to provisions of the Inland Lake and Streams Act (Act 346 of 1972), the Soil Erosion and Sedimentation Control Act (Act 347 of 1972, the Wetland Protection Act (Act 203 of 1979) or any other statute deemed appropriate.

2. The construction of a canal, channel or any artificial waterway which traverses a wetland for the primary purpose of providing a navigable waterway which would promote or encourage development of a contiguous upland area is hereby forbidden.

SECTION 10.03 FUNNELING REQUIREMENTS

A. Funneling is defined as the use of a waterfront property, parcel or lot as common open space for waterfront access for a larger development located away from the waterfront.

1. Recreational areas such as parks, beaches, camping facilities, parkways and other similar recreational activities owned and operated by any Federal, State or local governmental agencies, division or authority thereof, and located in lakefront property and riparian rights, are not subject to the standards set forth in this Section provided they are intended for the use of the general public.

2. Non-riparian property providing non-public lakefront access privileges to a commonly owned riparian parcel of land, shall have these rights only by deeded conveyance assigned to the non-riparian property. These riparian rights to the waterfront property shall not be sold, rented or leased to others unless such rights are conveyed by the selling, leasing or renting of the non-riparian property.

B. Funneling Controls

1. It has been determined that funneling is harmful to the public health, safety and welfare and constitutes an improper use of land and natural resources in that it causes overcrowding of lakes, streams and lands adjacent to them, contributes to pollution and degradation of public waters, creates hazards to life and property by increasing the risk of boating accidents, adversely affects the recreational experiences of both riparians and the general public and adversely impacts property values of shoreline properties located near funnel developments.

2. It is the declared purposed of this zoning ordinance provision to regulate funneling so as to protect the health, safety and general welfare of the citizens of Isabella County and carry out the intent of the Michigan Zoning Enabling Act (Act 110 of the Public Acts of 2006, as amended).

C. Funneling Standards

1. Any development in any zoning district which shares a common lakefront or stream area may not permit more than one single family home, cottage, condominium or apartment unit to the use of each 25 feet of lake or stream frontage in such common lakefront or stream are as measured along at the water's edge of the normal high water mark of the lake or stream. In addition, a minimum common area of 1,250 square feet is required per each 25 feet of water frontage. These restrictions are intended to limit the number of user of the lake or stream frontage, to preserve the quality of the waters, and to preserve the quality of recreational use of all waters within the county. This restriction shall apply to any parcel regardless of whether access to the water shall be gained by easement, common fee ownership, single fee ownership or lease.

2. Wetlands shall not be utilized to calculate water frontage or the lot area of a common waterfront access site.

3. On common waterfront sites with water frontage greater than 300 feet, vegetative buffers shall be established of sufficient size and location to afford adequate screening from adjacent properties.

4. Not more than one dock space for each 100 feet of common water frontage shall be provided for the mooring and docking of boats. Not more than three motor powered craft shall be permitted per 100 feet of common lake or stream frontage. Boat mooring facilities shall be located with due respect to swimming beaches and docks on the same property or on adjoining properties. No facilities for launching power craft from the common waterfront site shall be permitted.

5. Overnight vehicle parking and the usage of camping tents, motor homes and trailers shall not be permitted within the boundaries of the common waterfront site.

ARTICLE 11
SITE PLAN REVIEW

SECTION 11.01 PURPOSE

It is the purpose of this Article to require site plan approval for buildings, structures and uses that can be expected to have a significant impact on natural resources, traffic patterns, adjacent parcels and land uses, and on the character of future development. It is further the purpose of this Article to achieve, through site plan review, safe and convenient traffic movement; harmonious relationships of buildings, structures and uses; and the conservation of natural features and resources.

SECTION 11.02 USES REQUIRING SITE PLAN APPROVAL

A. The following buildings, structures and uses require site plan approval by the planning commission:

1. All Special Land Uses.

2. All new Commercial or Industrial Uses except for those provided for in Section 11.02 B. ***(08-08 Eff. October 25, 2008)***

3. Additions to existing commercial and industrial uses of over five thousand (5,000) square feet. ***(08-08 Eff. October 25, 2008)***

4. On Site WECS up to 66 feet in height and Anemometer Towers up to 66 feet in height. ***(08-10 Eff. November 3, 2008)***

5. Parking areas containing 20 or more parking spaces.

6. Parks and recreational areas.

7. Private Roads. ***(07-01 Eff. May 15, 2007)***

B. The zoning administrator shall review site plans for the following:

1. Additions to commercial and industrial uses of under five thousand (5,000) square feet. ***(08-08 Eff. October 25, 2008)***

2. A change of use that does not result in a change in the building footprint or parking requirements. ***(08-08 Eff. October 25, 2008)***

C. In cases where the Zoning Administrator or the applicant reasonably determines that a site plan presents problems or issues which should be reviewed for approval or rejection by the Planning Commission because of area wide effects, or technical difficulties or considerations, the Zoning Administrator may, with proper notice to the

owner, refer the matter to the Planning Commission for review and action in accordance with the procedures and standards set forth for all Planning Commission review activities by this ordinance. ***(08-08 Eff. October 25, 2008)***

SECTION 11.03 CHANGES IN THE APPROVED SITE PLAN *(08-08 Eff. October 25, 2008)*

A. The holder of an approved site plan shall notify the Zoning Administrator of any proposed change to the site plan.

B. Minor changes may be approved by the Zoning Administrator upon determining that the proposed revision(s) meet the standards of the ordinance and the intent of the design and will not alter the basic design or any specified conditions imposed as part of the original approval. Minor changes shall include the following:

1. Change in the building size, up to five percent (5%) in total floor area.

2. Movement of buildings or other structures by no more than ten (10) feet.

3. Replacement of plant material specified in the landscape plan with comparable materials of an equal or greater size.

4. Changes in approved building materials to a comparable or higher quality.

5. Relocation of an outdoor waste receptacle.

6. Modification of up to ten percent (10%) of the total parking area provided the number of parking spaces is not reduced below that required by this Ordinance.

7. Sign location or reduction in size or height.

8. The addition of small accessory buildings of not more than two hundred (200) square feet in area.

9. Changes in floor plans which do not alter the character of the use.

10. Changes required or requested by a County, State, or Federal regulatory agency in order to conform to other laws or regulations.

C. A proposed change not determined by the Zoning Administrator to be minor shall be submitted to the Planning Commission as a site plan amendment and shall be reviewed in the same manner as the original application. If the Zoning Administrator determines that a proposed minor change may have a major impact on the area involved, he may refer the plan to the Planning Commission

and the plan shall be reviewed in the same manner as the original application.

SECTION 11.04 SITE PLAN REQUIREMENTS

Each site plan submitted shall contain the following information, unless specifically waived by the planning commission, in whole or in part;

SITE PLAN REQUIREMENTS
The date, north arrow, and scale. The scale shall be not less than 1" = 20' for property under three acres and at least 1" = 100' for those three acres or more
All lot and/or property lines are to be shown and dimensioned, including building setback lines on corner lots
The location and height of all existing and proposed structures on and within 100' of the subject property's boundary
The location and dimensions of all existing and proposed drives, sidewalks, curb openings, signs, exterior lighting, curbing, parking areas (show dimensions of a typical parking space), unloading areas, recreation areas, common use areas, and areas to be conveyed for public use and purpose
The location and pavement width and right-of-way width of all abutting roads, streets, alleys or easements
The name and address of the individual or firm responsible for the preparation of the site plan
The name and address of the property owner or petitioner
A locational sketch drawn to scale
The respective zoning abutting the subject property
The location, height and types of fences, walls and landscaping
Size and location of existing and proposed utilities, including proposed connections to public sewer or water supply systems
The location and size of all surface water drainage facilities
For multiple family and manufactured home communities, contour intervals shall be shown (two foot intervals for average slopes ten percent and under, five foot intervals for slopes over ten percent). Topography, however, is encouraged to be shown on all site plans ***(08-03 Eff. June 2, 2008)***

SECTION 11.05 REVIEW PROCEDURE *(08-08 Eff. October 25, 2008)*

A. Review procedures as required for review by the planning commission:

1. The proposed site plan shall be submitted in eleven (11) copies to the zoning administrator.

2. The zoning administrator shall keep two (2) copies of the proposed site plan and deliver nine (9) copies of the proposed site plan to the planning commission.

3. The planning commission shall study the site plan and shall approve or

disapprove the proposed site plan.

a. Upon approval of the proposed site plan, the chairperson of the planning commission shall sign two (2) copies of the site plan as final approval. One (1) copy of the signed site plan shall be kept in the county's records and the other returned to the applicant.

b. If the site plan is disapproved, the reasons for the disapproval shall be stated clearly and delivered to the applicant.

B. Review procedures as required for review by the zoning administrator:

1. The proposed site plan shall be submitted in two (2) copies to the zoning administrator.

2. The zoning administrator shall study the site plan and shall approve or disapprove the proposed site plan.

a. Upon approval of the proposed site plan, the zoning administrator shall sign two (2) copies of the site plan as final approval. One (1) copy of the signed site plan shall be kept in the county's records and the other returned to the applicant.

b. If the site plan is disapproved, the reasons for the disapproval shall be stated clearly and delivered to the applicant.

SECTION 11.06 STANDARDS FOR SITE PLAN REVIEW ***(08-08 Eff. October 25, 2008)***

A. In reviewing a site plan, the planning commission or the zoning administrator where applicable shall determine whether the applicant has established that the site plan is consistent with this ordinance and in accordance with the adopted plan of the county and more specifically:

1. That the movement of vehicular and pedestrian traffic within the site and in relation to access streets will be safe and convenient.

2. That the site plan is harmonious with, and not injurious or objectionable to, existing and projected uses in the immediate area.

3. That the site plan shows the use will be adequately served by necessary improvements, including but not limited to, sewage collection and treatment, potable water supply, storm drainage, lighting, roads and parking.

4. That the site plan is adequate to provide for the health, safety and general

welfare of the persons and property on the site and in the neighboring community.

5. The chairperson of the planning commission or the zoning administrator where applicable shall not sign the approved site plan until the applicant has submitted three copies of all permits which may be required by the county or the state for the construction of the use, such as but not limited to, permits for on-site wastewater disposal, and permits required under the Soil Erosion and Sedimentation Act, Act 347 of the P.A. of 1972, the Inland Lakes and Streams Act, At 346 of the P.A. of1972, and the Wetland Protection Act, Act 203 of the P.A. of 1979.

SECTION 11.07 REGULATIONS *(08-08 Eff. October 25, 2008)*

A. No grading, removal of tress or other vegetation, land filling, or construction of improvements shall commence for any development which requires a site pan approval until an approved site plan has been signed by the chairperson of the planning commission or the zoning administrator where applicable.

B. The zoning administrator shall not issue a zoning permit for any use requiring site plan approval until an approved site plan has been signed by the chairperson of the planning commission or the zoning administrator where applicable.

C. The building inspector shall not issue a building permit for any use requiring site plan approval until an approved site plan has been signed by the chairperson of the planning commission or the zoning administrator where applicable.

ARTICLE 12
SPECIAL LAND USES

SECTION 12.01 PURPOSE

Special land uses are those uses of land which require individual review and restriction in order to ensure compatibility with the surrounding area, public services and facilities and adjacent land uses. The purpose of this Article is to establish procedures and criteria which shall be applied in considering a special use request. The criteria provided in this Article shall be in addition to those required elsewhere in this ordinance. The following special land uses are subject to the conditions of this Article:

A. Adult entertainment activities. ***(89-04 Eff. October 19, 1989)***

B. Airports (public and private).

C. Agricultural labor housing.

D. Apartments (second floor).

E. Auction Facilities ***(08-11 Eff. November 3, 2008)***

F. Bed and Breakfast Establishments. ***(01-03 Eff. November 16, 2001)***

G. Cemeteries and customarily related uses (private or public). ***(08-02 Eff. April 19, 2008)***

H. Communication Towers and Antennas ***(01-02 Eff. October 4, 2001)***

I. Confined feedlots and livestock housing facilities.

J. Convenience centers. ***(89-05 Eff. January 26, 1990)***

K. Country clubs and golf courses.

L. Crematories ***(08-02 Eff. April 19, 2008)***

M. Child Care Centers ***(08-05 Eff. June 2, 2008)***

N. Excavation-Transportation Services. ***(92-08 Eff. January 21, 1993)***

O. Existing Single-Family Dwellings (***01-07 Eff. February 5, 2002)***

P. Fairgrounds, flea markets and amusement parks.

Q. Filling stations and convenience centers.

R. Fuel storage facilities.

S. Group Child Care Homes ***(08-05 Eff. June 2, 2008)***

T. Kennels.

U. Marinas, yacht and boat clubs.

V. Meat processing plants.

W. Mineral extraction industries.

X. Mini-warehouses.

Y. Miniature golf and golf driving ranges. ***(94-03 Eff. January 31, 1995)***

Z. Manufactured home communities. ***(08-03 Eff. June 2, 2008)***

AA. Motor vehicle repair facilities. ***(89-05 Eff. January 26, 1990)***

BB. Nursing homes.

CC. Outdoor recreational facilities.

DD. Planned Unit Developments (PUD's).

EE. Private Indoor Entertainment Facilities (such as family type functions, funeral dinners, weddings, reunions, and other similar activities), Fraternal Organizations and Lodge Halls. ***(99-03 Eff. September 11, 1999)***

FF. Public and institutional uses.

GG. Race tracks.

HH. Recycling drop-off sites.

II. Restaurants.

JJ. Rural Production and Processing Facilities ***(02-05 Eff. February 11, 2003)***

KK. Salvage yards.

LL. Septage Waste Storage Facilities ***(10-02 Eff. August 2, 2010)***

MM. Solid waste disposal areas.

NN. State licensed residential facilities.

OO. Utility Grid WECS, On Site WECS over 66 feet in height, and Anemometer Towers over 66 feet in height. ***(08-10 Eff. November 3, 2008)***

SECTION 12.02 APPLICATION PROCEDURES

An application for a Special Land Use Permit shall comply with the following procedures:

A. Application. Applications for Special Land Use Permits shall be submitted through the zoning administrator to the planning commission. Each application shall be accompanied by the payment of a fee in accordance with the schedule of fees adopted by the Isabella County Board of Commissioners. No part of any fee shall be refundable. ***(08-09 Eff. October 25, 2008)***

B. Required Information. An application for a Special Land Use Permit shall include the following information:

1. A completed application form, supplied by the zoning administrator ***(08-09 Eff. October 25, 2008)***.

2. A site plan as required in Section 11.04.

C. Hearing. After a preliminary review of an application for a Special Land Use Permit, the planning commission shall hold a public hearing or hearings on the special use request.

1. Notice of said hearing shall be given by one publication in a newspaper published in the county and shall be printed not less than 15 days before the date of such hearing. The notice~~s~~ shall do all of the following ***(07-02 Eff. March 7, 2007)***:

a. Describe the nature of the request

b. Indicate the property that is the subject of the request. The notice shall include a listing of all existing street addresses within the property. Street addresses do not need to be created and listed if no such addresses currently exist within the property. If there are no street addresses, other means of identification may be used.

c. State when and where the request will be considered.

d. Indicate when and where written comments will be received concerning the request.

2. Not less than 15 days before the date of such hearing, a notice containing the aforementioned information shall be sent, by first class mail or personal delivery, to all persons to whom real property is assessed and to the occupants of all dwellings within 300 feet of the boundary of the property in question, including owner of said property. The notice shall also be sent to the supervisor of the township in which the property in question is located. ***(07-02 Eff. March 7, 2007)***

D. Review. Within a reasonable time following the public hearing, the planning commission shall make a determination on the Special Land Use Permit request. The determination shall be in accordance with the criteria for approval stated in Section 12.03 and such other standards contained in this ordinance. The planning commission may request a report on any special land use application from the zoning administrator regarding conformance of the special land use request with the requirements of this ordinance and the development objectives of the county. ***(08-09 Eff. October 25, 2008)***

E. Issuance of a Special Land Use Permit. Upon the approval by the planning commission, the Special Use Permit shall be signed by the Chairperson of the planning commission and the zoning administrator. The permit shall include any conditions necessary to ensure conformance with this ordinance and the requirements of Section 16d of Act 110 of the Public Acts of 2006, as amended. The permit shall become valid 21 days after the date of approval. ***(08-09 Eff. October 25, 2008)***

F. Appeal. Within 21 days following the date of decision on any special land use permit, an applicant or an aggrieved party, including any governmental body or agency, may appeal the decision of the planning commission to the zoning board of appeals. Upon the filing of an appeal the application, all relevant documents, testimony and the findings and decision of the planning commission shall be transmitted to the zoning board of appeals. ***(94-03 Eff. January 31, 1995)***

G. Decisions. All decisions shall contain a statement of findings and conclusions specifying the basis for the decision and any conditions imposed upon the special land use. ***(07-07 Eff. August 26, 2007)***

H. Inspections and Revocation. The special land use permit shall be revoked if any of the conditions imposed in the granting of the permit are not met and maintained. Instances where development authorized by a Special Use Permit has not commenced within one year from the date of issuance, the permit shall be void. ***(94-03 Eff. January 31, 1995)***

SECTION 12.03 GENERAL REQUIREMENTS FOR SPECIAL LAND USES

The general requirements for all special land uses are as follows:

A. Whether the proposed development is in general agreement with the County's adopted Comprehensive Plan.

B. Whether the density or use characteristics of the proposed development are detrimental or could be considered to be significantly detrimental to adjacent properties and land uses.

C. The special land use shall be designed, constructed, operated and maintained in a manner harmonious with the character of adjacent property and the surrounding area.

D. The special land use shall not be hazardous to adjacent property or involve uses, activities, materials or equipment which will be detrimental to the health, safety or welfare of persons or property due to traffic, noise, smoke, odor, fumes or glare.

E. The special land use shall be adequately served by essential public facilities and services; or it shall be demonstrated that the person responsible for the proposed special use shall be able to continually provide adequate services and facilities deemed essential to the special use under consideration. Said facilities or services shall be approved by the Central Michigan District Health Department.

F. No special use shall be conducted between the hours of 8 p.m. and 8 a.m. unless otherwise approved by the planning commission. ***(89-05 Eff. January 26, 1990)***

SECTION 12.04 PERFORMANCE BONDS

The planning commission may require a performance bond to be posted by the applicant or by some other reasonable surety arrangement at appropriate stages of development to ensure that the development will be executed in accordance with the approved plan.

SECTION 12.05 DESIGN STANDARDS FOR SPECIAL LAND USES

All special land uses shall be subject to the requirements of the district in which they are located in addition to the following design standards:

A. Adult Entertainment Activities *(89-04 Eff. October 19, 1989)*

In the development of a community it is recognized that there are some uses which, because of their very nature, are recognized as having serious

objectionable operational characteristics, particularly when several of them are concentrated under certain circumstances thereby having a deleterious effect upon the adjacent areas. Special regulation of these uses is necessary to ensure that their adverse effects will not contribute to the blighting or downgrading of the surrounding neighborhood. These special regulations are itemized in this Article. The primary control or regulation is for the purpose of preventing a concentration of these uses in any 1 area (i.e.; not more than 2 such uses within 1,320 feet of each other which would create such effects).

1. The adult entertainment activities itemized in this section shall be limited to the following zoning districts: C-1 General Commercial District. Additionally, each shall be subject to the specific requirements of each zoning district and all other applicable regulations.

2. These activities include: Adult bookstores, adult motion picture theaters, adult mini-motion picture theaters, massage establishments, establishments for consumption of beer or intoxicating liquor on the premises and having adult entertainment, steam baths, health clubs, taxi dance halls, and other uses which provide goods or services which are distinguished or characterized by their emphasis on matters depicting, describing or relating to “specified sexual activities” or “specified anatomical areas” or which is distinguished or characterized by its emphasis on “specified sexual activities” or “specified anatomical areas.”

3. An application to establish an adult entertainment activity shall not be approved if there is already in existence 2 or more adult entertainment activities within 1,320 feet of the boundaries of the site of the proposed activities, excepting as otherwise provided for within the Ordinance.

4. An application to establish an adult entertainment activity shall not be approved if the proposed location is within 1,320 feet of any residentially zoned district, trailer park, licensed child care center, adult foster care home, senior citizens’ center, K through 12 school, park or church, excepting as otherwise provided for within this Ordinance. ***(08-05 Eff. June 2, 2008)***

5. The Planning Commission may waive the locational standards limiting adult entertainment activities as they relate to similar uses if the following findings are made:

    a. That the proposed use will not be contrary to the public interest or injurious to nearby properties and that the spirit and intent of the article will be observed.

    b. That the proposed use will not enlarge or encourage the development of a “skid row” area.

c. That the establishment of an additional regulated use in the area will not be contrary to any program of neighborhood conservation nor will it interfere with any program of urban renewal.

d. That all applicable regulations of the article will be observed.

6. The Planning Commission may waive the locational standards limiting adult entertainment activities as they relate to residentially zoned districts, licensed child care centers, adult foster care homes, senior citizen centers, trailer parks, K through 12 schools, parks or churches; provided that a validated petition requesting such a waiver, signed by the owners or purchasers of at least 51 percent of parcels of land within 2,640 feet of the proposed location is presented to the Commission. ***(08-05 Eff. June 2, 2008)***

a. The circulator of the petition requesting a waiver shall subscribe to an affidavit attesting to the fact that the circulator personally witnessed the signature on the petition and the same were affixed to the petition by the person whose name appear thereon.

b. The petition will be so worded that the signers of the petition will attest to the fact that they are the owners or purchasers of the parcel of land identified by the permanent parcel number opposite their signature.

c. For the purpose of this section, parcels of land shall equate to the permanent parcel numbers assigned by the local government to all property within the said 2,640 feet.

7. An applicant requesting a waiver of locational requirement shall file an application with the zoning administrator however, the zoning administrator shall not accept an application for the waiver of locational requirements for an adult entertainment activities as they relate to residentially zoned districts, licensed child care centers, adult foster care homes, senior citizen centers, trailer parks, K through 12 schools, parks, or churches without a petition as required herein. Said petition shall be validated by the zoning administrator. The zoning administrator shall then notify the planning commission of the receipt of the requests and petition within 15 days of filing. ***(08-09 Eff. October 25, 2008)***,

8. Prior to the granting of a waiver of locational requirements, the Planning Commission may impose any conditions or limitations upon the establishment, location, construction, maintenance, or operations of regulated use as may in its judgment be necessary for the protection of

the public interest. Any evidence and guarantee may be required as proof that the conditions stipulated in connection therewith will be fulfilled.

9. Definitions for Purposes of this section are set forth in Article 2 of the Zoning Ordinance.

B. Airports (Public and Private)

1. Airports shall only be located in AG-1, AG-2 and AG-3 Districts.

2. They shall be located at least ½ mile from any residential district.

3. Minimum lot site shall be 10 acres.

C. Agricultural Labor Housing

1. Agricultural labor housing for the housing of migrant farm workers and migrant employees of permitted food processing uses may be permitted by the planning commission in the AG-1, AG-2 and AG-3 Districts only.

2. Agricultural labor housing shall be located upon the same parcel of land as the principal structure to which they are accessory and only on a farm as defined in Article 2.

3. Minimum farm size shall be at least 10 acres in size.

4. Agricultural labor housing may be occupied only between the periods of April 15 through November 15 and shall be located so as to prevent entry by any person but the owner during the remaining part of the year.

5. Agricultural labor housing may not be used for the housing of persons not directly employed by the owner of the dwelling.

6. The rules, regulations and standards of the State of Michigan governing the licensing and operation of migrant housing shall apply where any dwelling is used to house one or more migrant workers. It is the purpose and intent of this provision to incorporate by reference such rules, regulations and standards and further to apply the same of the housing of one or more such migrant workers notwithstanding that such act provides that it applies to five or more such workers.

7. Agricultural labor housing shall be located at least 50 feet from any public street or property line and 400 feet from any residential dwelling of an adjacent property owner.

8. All construction shall conform to the Building Codes adopted by the county and other ordinances where such regulations impose greater standards than State and Federal regulations.

9. Any other special conditions may be imposed by the planning commission to ensure a desirable living environment for the migrant workers and to protect the values and desirability of adjacent properties.

D. Apartments (second floor)

1. Second floor apartment shall only be located in C-1 Districts.

2. The residential space shall have safe, convenient access that is independent of the commercial use.

3. There shall be a minimum of 2 parking spaces per dwelling unit.

E. Auction Facilities *(08-11 Eff. November 3, 2008)*

1. Auction Facilities are permitted by special use in AG-2, AG-3 and C-1 districts.

2. No access to or from such establishment shall be permitted on any unpaved public or private road.

3. The Planning Commission may require up to a six (6) foot fence, wall, or appropriate greenbelt for screening purposes to be constructed along any and all sides of the proposed site.

4. The lot area used for parking, display, or storage shall be provided with a durable and dustless surface, and shall be graded and drained so as to dispose of all surface water in accordance with current storm water management requirements set forth by the controlling or receiving agency.

5. The display of auction vehicles including vehicle transportation loading and unloading zones shall not extend into any required yard or occupy any required parking or maneuvering areas for onsite vehicular movement.

6. No off site parking shall be permitted without approval of the planning commission. At no time shall parking or the loading and unloading of vehicles be allowed in any road right of way.

7. The use of external audio equipment is acceptable provided no decibel level greater than (forty-five) 45 can be measured at the site property line.

8. All on site lighting shall be full cut off shielded lighting and no light shall be observed crossing the site property line.

9. Access to the site shall be located at least two hundred (200) feet from any intersection as measured from the center line of the intersection to the centerline of the access drive.

F. Bed and Breakfast Establishments *(01-03 Eff. November 16, 2001)*

1. Such uses shall only be established in a single family dwelling.

2. The establishment shall contain the principal residence of the operator.

3. The establishment shall be located with direct access to a public street/road.

4. No such use shall be permitted on any property where there exists more than one other Bed and Breakfast Establishment within 660 feet, measured between the closet property lines.

5. The number of guest rooms in the establishment shall not exceed five (5), plus one (1) additional guest rooms for each ten thousand (10,000) square feet or fraction thereof by which the lot area exceeds one (1) acre, not to exceed a total of nine (9) guest rooms.

6. Interior design of the establishment must adhere to typical residential characteristics so that the dwelling unit retains its inherent single-family, residential appearance. All guest rooms must have interior access to common areas (e.g. dining, sitting, etc.)

7. The exterior design must conform to the predominant residential character of the neighborhood.

8. Meals shall be served only to the operator's family, employees, and overnight guests.

9. Accessory retail or services used to a Bed and Breakfast Establishment shall be made available only to overnight guests of the establishment, including but not limited to gift shops, restaurants, bakeries, weddings or special events.

10. Exterior refuse storage facilities beyond what is normally expected for a detached single family residence shall meet the location and screening requirements of Section 3.10.

11. The establishment shall be required to provide two (2) parking spaces for the operator's family plus one (1) parking space per each guest room.

12. Parking and vehicle maneuvering areas, and drive entrances shall be located to minimize negative effects on adjacent properties.

13. The operator of each establishment shall maintain a guest register which shall be subject to inspection by the Isabella County Zoning Administrator ***(08-09 Eff. October 25, 2008)*** upon request.

14. The Special Use Permit shall be subject to annual review by the Isabella County Planning Commission.

G. Cemeteries and Customarily Related Uses (private or public) ***(08-02 Eff. April 19, 2008)***

1. Cemeteries shall only be located in AG-1, AG-2 and AG-3 Districts.

2. No principal or accessory building shall be closer than 200 feet of any existing residential dwelling located on adjacent property.

3. Driveways and parking areas shall be at least 50 feet from any adjacent property line.

4. Maximum lot size shall be 10 acres in AG-1 and AG-2 Districts.

5. Any building used as a crematory shall not be located closer than 300 feet to any Residential District.

6. Bodies to be cremated shall not be stored or kept on the premises for a period exceeding seven (7) calendar days.

7. Any building used as a crematory shall provide an auxiliary means of electrical service in the event of a power failure.

8. Any crematory on the cemetery premises shall, at all times, be operated in full compliance with any and all other applicable laws and regulations.

H. Communication Towers and Antennas ***(01-02 Eff. October 4, 2001)***

1. Communication Towers and Antennas are permitted by special use in AG-1, AG-2, AG-3, C-1, C-2, I-1 and R-2 districts.

2. All applications for new Communication Towers and for Collocation shall be processed per the specific requirements of the Michigan Zoning

Enabling Act (P.A. 110 of 2006, as amended). ***(12-01 Eff. September 3, 2012)***

3. The applicant shall provide evidence that there is no reasonable or suitable alternative for collocation of antennas on an existing communication tower within the service area of the proposed tower.

4. The applicant shall provide an inventory of its existing towers, antennas, or sites approved for towers or antennas, that are either within Isabella County or within one (1) mile of the border thereof, including specific information about the location, height and design of each tower. The planning commission may share such information with other applicants applying for approval under this ordinance or other organizations seeking to locate antennas within Isabella County, provided, however that the planning commission is not, by sharing such information, in any way representing or warranting that such sites are available or suitable.

5. All towers and antennas shall be located so that they do not interfere with reception in nearby residential areas. In the event a communication tower causes interference, the communication company shall take all steps necessary to correct and eliminate such interference.

6. No new communication tower or antenna shall be located within a three (3) mile radius of an existing communication tower or antenna. This requirement may be waived by the planning commission if one of the following conditions are met:

   a. The proposed communication facility is located on an existing communication tower.

   b. The communication tower is to serve solely a governmental or educational institution.

7. No communication tower or antenna shall be located closer than five hundred (500) feet from a residential use or a residentially zoned property. This requirement may be waived by the planning commission if one of the following conditions are met: ***(16-02 Eff. February 16, 2016)***

   a. The proposed communication facility is located on an existing communication tower.

   b. The communication tower is to serve solely a governmental or educational institution.

8. No communication tower and antenna shall be greater than two hundred (200) feet in height, except if in the opinion of the planning commission,

the applicant has sufficiently demonstrated that a proposed communication tower in excess of two hundred (200) feet will reduce the total number of potential communication towers in the area.

9. The tower base shall be setback, a distance equal to one and a half (1 ½) times the height of the tower, except in the case that the planning commission has determined the applicant has provided sufficient evidence justifying a reduction in the setback requirement. All other buildings or structures shall meet the minimum setback requirements of the zoning district. ***(16-02 Eff. February 16, 2016)***

10. The applicant shall provide verification with a certified sealed print that the antenna and the communication tower have been reviewed and approved by a professional engineer and that the proposed installation is in compliance with all the applicable codes.

11. The applicant shall provide the legal description of the parent parcel and any leased parcels.

12. A security fence at least six (6) feet in height, but not more than ten (10) feet, shall be constructed around the tower and any other related apparatuses (i.e. ground antennas, satellite dishes, accessory structures).

13. The planning commission may require a ten (10) foot wide buffer of planted material that effectively screens the view of the tower compound.

14. All communication towers shall be equipped with an anti-climbing device to prevent unauthorized access.

15. No signs, except for warning, or other cautionary signs not to exceed two (2) square feet in area shall be permitted on site.

16. All new communication towers and antennas shall either maintain a galvanized steel finish or, subject to any applicable standards of the Federal Aviation Administration, be painted a neutral color so as to reduce visual obtrusiveness.

17. Collocation does not require an additional special use permit or any other zoning approval if the following requirements are met: ***(12-01 Eff. September 3, 2012)***

    a. The existing communication tower or existing communications equipment compound is in compliance with the Isabella County Zoning Ordinance and/or was approved by the Planning Commission or Zoning Administrator.

b. The collocation will not increase the overall height of the communication tower by more than 20 feet or 10% of its original height, whichever is greater.

c. The collation will not increase the width of the communication tower by more than the minimum necessary to permit collocation.

d. The collocation will not increase the area of the existing communications equipment compound by more than 2500 square feet.

e. The collocation complies with the terms and conditions of any previous final approval of the communications tower or equipment compound by the Planning Commission or Zoning Administrator

18. The applicant shall submit details of communication tower lighting approved by the Federal Aviation Administration. All lights shall be restricted to the extent that is required for compliance with Federal Aviation Administration regulations and on site security.

19. All communication tower permits issued by the Isabella County Planning Commission shall be contingent upon any necessary approval of the Federal Aviation Administration, Federal Communication Commission, State Bureau of Aeronautics/Tall Structures Act and any other applicable state or federal acts.

20. The applicant shall submit a report or letter form the Federal Aviation Administration that the proposed tower complies with all airport safety requirements for all public and private airports in or within four (4) miles of Isabella County.

21. Communication towers and antennas shall be regulated and permitted pursuant to Article 12 Section 12.05 (H) of the Isabella County Zoning Ordinance and shall not be regulated or permitted as essential services, public utilities, or private utilities.

22. Any communication tower which becomes abandoned or discontinued for a period of twelve (12) months shall be required to be removed immediately by the owner and/or lessee. Abandonment or discontinuance shall be determined when any of the following conditions are evident: disconnection of electricity; property, buildings, or grounds that have fallen into disrepair; or the removal of all antennas or support structures.

23. The application shall include a description of security to be posed at the time of receiving a building permit for the communication tower to ensure

removal of the communication tower when it has been abandoned or is no longer needed. In this regard, a $15,000 security shall, at the election of the applicant, be in the form of cash; or surety bond; establishing a promise of the applicant and owner of the property to timely remove the communication tower as required under this section of the ordinance, with the further provision that the applicant and owner shall be responsible for the payment of any costs and attorneys fees incurred by the community in securing removal.

I. Confined Feedlots and Livestock Housing Facilities

1. Confined feedlots shall only be located in AG-1 and AG-2 Districts.

2. Minimum lot size shall be 10 acres and must be on a farm as defined in Article 2.

3. Confined feedlots shall be set back at least 500 feet from any property line or road right-of-way, at least 1,000 feet from any residential dwelling or district and at least ½ mile from a concentration of ten or more residential homes or lots in a contiguous area of 10 acres or less.

4. All manure shall be incorporated or disposed of in a reasonable manner taking into account the season of the year and wind direction. Each feedlot shall have sufficient area to permit proper incorporation or disposal of the manure.

J. Convenience Centers [see Section 12.05 (Q)]

K. Country Clubs and Golf Courses

1. They are only located in AG-2, AG-3 and L-R Districts.

2. All uses, operations and structures permitted herein, including fences, fronting any public road or thoroughfare used for access or exit purposes shall be landscaped in accordance with plans approved by the Planning Commission.

3. No principal or accessory building shall be closer than 50 feet from any abutting residential district or within 200 feet of any existing residential dwellings.

L. Crematories *(08-02 Eff. April 19, 2008)*

1. Crematories, not located in a cemetery, shall be located by special use in only the I-1 District.

2. Any building used as a crematory shall not be located closer than 300 feet to any Residential District.

3. Bodies to be cremated shall not be stored or kept on the premises for a period exceeding seven (7) calendar days.

4. Any building used as a crematory shall provide an auxiliary means of electrical service in the event of a power failure.

5. No funeral services or other similar ceremonies shall be held on the premises.

6. The crematory shall, at all times, be operated in full compliance with any and all other applicable laws and regulations.

M. Child Care Centers *(01-01 Eff. August 1, 2001) (08-05 Eff. June 2, 2008)*

1. Child Care Centers shall be located only in C-1 Districts.

2. The outdoor play area shall comply with Section R400.5117 of the Licensing Rule.

3. Fencing at least 48 inches, and no more than seven (7) feet in height, shall be provided around all outdoor areas accessible to children.

N. Excavation-Transportation Services *(92-08 Eff. January 21, 1993)*

1. Excavation-Transportation Services shall be located by special use only in AG-1, AG-2, and AG-3 Districts and by right in I-1 Districts.

2. All heavy equipment used in the operation shall enter and exit the property in driveways located no less than 100 feet from an adjacent residence.

3. Hours of operation shall be 6:00 a.m. to 10:00 p.m.

4. All storage of equipment and materials must be inside a building or in the rear yard and behind the building.

5. Screening, in accordance with Section 3.23, shall be provided from adjacent residences.

6. The maximum lot size shall be 5 acres in all Agricultural Districts.

O. Existing Single-Family Dwellings *(01-07 Eff. February 5, 2002)*

1. Applicable to existing Single-Family Dwellings (non-conforming) located in the C-1 and C-2 Districts.

2. The Planning Commission shall determine appropriate setback and to coverage restrictions to avoid adversely affecting adjacent uses.

3. Accessory structures are permitted in accordance with Section 3.02.

4. The number of dwelling units cannot be increased.

5. Parking requirements for the use shall be in accordance with Section 7.07 (D).

P. Fairgrounds, Flea Markets and Amusement Parks

1. They are only located in C-2 Districts.

2. A landscaped area of at least 25 feet in width shall be maintained around the periphery. Screening as approved by the planning commission and in conformance with Section 3.23 shall be required when existing residential dwellings are located within 200 feet of the property line.

3. No principal or accessory building shall be erected, nor any entertainment or display activity be conducted, within 50 feet of any property line. In the event any existing residential dwelling is located on abutting property, the aforementioned shall not be located within 200 feet of the property line.

4. Proper arrangements shall be made and the required approvals obtained from the Central Michigan District Health Department to provide necessary sanitation facilities.

5. All uses and activities shall have prior written approval from the planning commission. Any other requirements in this ordinance associated with a contemplated use or activity shall be adhered to if the use or activity is approved.

Q. Filling Stations and Convenience Centers

1. They shall be located by special use only in AG-2, AG-3 and C-2 Districts, and by right in C-1 district. Convenience centers may also be located in the L-R Districts. ***(89-05 Eff. January 26, 1990)***

2. Curb cuts shall not be permitted at such locations that will tend to create traffic hazards in the streets immediately adjacent thereto. Entrances shall

be no less than 60 feet from a street intersection (measured from the road right-of-way) or from adjacent residential districts. ***(89-05 Eff. January 26, 1990)***

3. The minimum lot area shall be 15,000 square feet and arranged so that ample space is available for all motor vehicles. Filling stations and convenience centers which are intended solely for the sale of gasoline, oil and minor accessories, having no facilities for repair or servicing of automobiles (including lubricating facilities), may be permitted on lots meeting the lot area requirements of the District it is located in.

4. No principal or accessory buildings shall be closer than 60 feet from any residential district or within 200 feet of any existing residential dwelling.

5. Fences and screening in accordance with Section 3.23, may be required by the planning commission to protect adjacent property.

6. In the L-R District, all refuse containers shall be located in the rear yard and be screened from view with a solid fence or wall in accordance with Section 3.23.

7. The maximum lot size shall be 10 acres in AG-2 Districts.

R. Fuel Storage Facilities

1. Fuel storage facilities shall only be located in AG-2 Districts.

2. All facilities shall be setback at least 200 feet from all property lines and 500 feet from any residential district.

3. The maximum lot size shall be 10 acres in AG-2 Districts.

S. Group Child Care Homes *(08-05 Eff. June 2, 2008)*

1. Group Child Care Homes may be located in all Agricultural and Residential Districts. ***(08-05 Eff. June 2, 2008)***

2. The location of all use shall comply with Act No. 116 of the Public Acts of 1973.

3. A drop-off/ pick-up area shall be provided for motorists off the public street or road.

4. Fencing at least 48 inches, and no more than 7 feet in height, shall be provided around all outdoor areas accessible to children.

5. The property shall be consistent with the characteristics of the neighborhood.

T. Kennels

1. Kennels shall be located in AG-2 and I-1 Districts.

2. The minimum lot size shall be at least 5 acres in all districts; the maximum lot size shall be 10 acres in AG-2 Districts.

3. The animals shall be housed at least 100 feet from any adjoining property and at least ½ mile from any residential district.

4. The kennel area is screened from view by appropriate screening as determined by the planning commission in conformance with Section 3.23.

5. A kennel permit shall be obtained from the Isabella County Animal Control Department.

U. Marinas, Yacht and Boat Clubs

1. Such uses shall only be located in L-R Districts.

2. Fences and screening in accordance with Section 3.23 may be required by the planning commission to protect adjacent property.

3. All such uses shall conform with the Marine Safety Act, Inland Lake and Streams Act and all other county, state and federal regulations.

4. No commercial enterprise shall be permitted to operate on the grounds, except those activities solely for the use of the patrons of the facility.

V. Meat Processing Plants

1. Meat processing plants shall only be located in C-1 and I-1 Districts.

2. Minimum lot size shall be three acres.

3. No such use shall be located within 100 feet of any property line or within 1,000 feet of any residential use or district.

W. Mineral Extraction Industries

1. They are located only in AG-2 and I-1 Districts.

2. It shall be the responsibility of the landowner or permit holder to use ecological conservation practices for all areas used for said sand and gravel excavation.

3. No business or industrial buildings or structures of a permanent nature shall be erected, except when such building is a permitted use within the district in which the gravel pit is located.

4. The planning commission may require that part or all of the operation be screened with a fence at least six feet in height and in conformance with Section 3.23. In addition, screening in conformance with Section 3.23 may be required on any side adjacent to any residential or commercial district.

5. No excavation should come within 150 feet of a residence or within 100 feet of a property line or a road right-of-way. The planning commission may allow excavation activities within this minimum set back area during the reclamation process provided no excavation is allowed within 50 feet of any property line and no activity is allowed within 25 feet of any property line.

6. All truck operations shall be directed away from residential streets, whenever practical.

7. Noise and vibration shall be minimized in their effect upon adjacent properties by the utilization of modern equipment designed to accomplish such minimization and by the proper use of berms, walls and natural planting screens. All equipment shall be maintained and operated in such a manner so as to eliminate, as far as practicable, excessive noise and vibrations which are not necessary in the operation of such equipment.

8. Air pollution in the form of dust and dirt shall also be kept to a minimum by the use of modern equipment and methods of operation designed to avoid any excessive dust or dirt or other air pollution injurious or substantially annoying to adjoining property owners. Interior and adjoining roads used in the operations shall have their surface treated to minimize any such nuisance.

9. The operation shall be restricted to the hours of 6 a.m. until 10 p.m.

10. Reclamation and rehabilitation of mined areas shall be accomplished progressively as the area is being mined. Not more than 50% of the intended project area for projects of greater than 40 acres, or more than 75% for projects of 40 acres or less, may be completed before restoration must begin. Substantial completion of reclamation and rehabilitation shall be effected within one year after the termination of mining or excavation

activity in each area. Inactivity for a 12 month consecutive period shall constitute, for this purpose, termination of mining activity.

11. The banks of all excavations shall be sloped to the waterline in a water-producing excavation, and to the pit floor in a dry operation at a slope which shall not be steeper than 1 foot vertical to four feet horizontal.

12. Topsoil of a quality equal to that occurring naturally in the area shall be replaced on excavated areas not covered by water, except where streets, beaches or other planned improvements are to be completed within a one-year period. Where used, top soil shall be applied to a minimum depth of four inches sufficient to support vegetation.

13. Vegetation similar to that which existed prior to the excavation process shall be restored by the appropriate seeding of grasses or the planting of trees and shrubs to establish a permanent vegetative cover on the land surface and to minimize erosion.

14. Upon cessation of mining operations by abandonment or otherwise, the operation company, within a reasonable period of time not to exceed 12 months thereafter, shall remove all plant structures, foundations, buildings, stockpiles and equipment, provided that buildings and structures which have a function under the reclamation plan and which can be lawfully used under the requirements of the zoning district in which they will be located may be retained.

15. No mineral extraction activity shall be allowed or commenced until a plan has been submitted to the planning commission disclosing compliance with all of the provisions of the ordinance or the manner in which compliance will be secured by the applicant. Such plans include, among other things, the following:

    a. A contour map of the tract of land involved in the operations, including dimensions of the same, access thereto, abutting public streets, additional roads, if any, to be constructed and the location and nature of abutting improvements on adjoining property.

    b. The number of acres and the location of the same proposed to be operated upon within the following 12 months' period after commencement of operations and the planned stages of reclamation.

    c. The type of mining or processing proposed to be conducted and the nature of the equipment to be used.

d. The location of the principal processing plant and the distance of any proposed excavation or mining from the boundaries of the site.

e. A map or plan disclosing the final grades and elevations to be established following the completion of the mining operations, including the proposed uses then contemplated for the land, future lakes and roads and such other matters as may evidence the bona fide nature of the reclamation and rehabilitation plans and the fact that the land will not be devastated and rendered unusable by the proposed mining activities.

16. For the purpose of legal non-conforming mineral extraction industries, expansion shall not be permitted if the expansion exceeds 50% of the area disturbed by mining activities as of February 15, 1989. All expansion after February 15, 1989 shall be reclaimed in accordance with Section 12.05 (W). ***(92-08 Eff. January 21, 1993)***

17. All permit applications for excavation must be co-signed by both the landowner and the operator.

X. Mini-Warehouse

1. Mini-warehouses shall only be located within C-1 and I-1 Districts.

2. All vehicular access to and from the site shall be from an arterial street and shall be approved by the planning commission.

3. Fences and screening in accordance with Section 3.23 may be required by the planning commission to protect adjacent property.

4. There shall be no outside storage or stockpiling. All merchandise shall be stored within an enclosed building.

5. Outdoor storage of boats and recreational vehicles is permitted provided the storage area is completely fenced and screened in accordance with Section 3.23 as approved by the planning commission. ***(14-04 Eff. September 15, 2014)***

Y. Miniature Golf and Golf Driving Ranges *(94-03 Eff. January 31, 1995)*

1. They are only located in AG-3 and C-2 Districts.

2. A minimum front yard of 100 feet shall separate all uses, operations and structures permitted herein, including fences, fronting any public street or highway used for access or exit purposes and shall be landscaped in accordance with plans approved by the planning commission.

3. Golf driving ranges shall provide safety screening and orientation as deemed reasonable and necessary by the planning commission.

4. No principal or accessory building shall be closer than 50 feet from any abutting residential district or within 200 feet of any existing residential dwelling.

Z. Manufactured Home Communities *(08-03 Eff. June 2, 2008)*

1. Manufactured home communities shall only be located within AG-3 Districts.

2. Manufactured home communities shall comply with all applicable procedures and requirements of Public Act 96 of 1987, as amended and the Michigan Administrative Code.

3. All manufactured homes shall be skirted within 30 days of placement within the manufactured home community and must meet the standards of Act 96 of the Public Acts of 1987, as amended.

4. All manufactured homes shall be anchored when installed in a manufactured home community with only those systems which are approved by Act 96 of the Public Acts of 1987, as amended.

AA. Motor Vehicle Repair Facilities *(89-05 Eff. January 26, 1990)*

1. Such facilities shall be located by special use only in AG-2, AG-3 Districts and as a permitted use in C-1 and I-1 Districts.

2. Curb cuts shall not be permitted at such locations that will tend to create traffic hazards in the streets immediately adjacent thereto. Entrances shall be no less than 50 feet from a street intersection (measured from the road right-of-way) or from adjacent residential districts.

3. The minimum lot area shall be 15,000 square feet and arranged so that ample space is available for all motor vehicles.

4. No principal or accessory buildings shall be closer than 60 feet from any residential district or within 200 feet of any existing residential dwelling.

5. Fences and screening in accordance with Section 3.23 may be required by the Planning Commission to protect adjacent property.

6. The planning commission shall limit the number of vehicles stored outdoors.

7. The maximum lot size shall be 10 acres in AG-2 Districts.

BB. Nursing Homes

1. Nursing homes are allowed as a special use in AG-3 Districts only.

2. All sites shall have access to an arterial street.

3. All building shall be set back at least 75 feet from the road right-of-way and 50 feet from all other property lines.

CC. Outdoor Recreational Facilities

1. They are allowed as a special use in AG-2 and AG-3 Districts only.

2. Minimum lot size shall be three acres.

3. No commercial enterprise shall be permitted to operate on the grounds, except those activities which are solely for the use of patrons of the outdoor facilities.

4. All target ranges shall not be located within one-half mile of any residential district and shall be screened and bermed as required by the planning commission.

5. No outdoor activity area shall be located within 100 feet of any property line.

6. Fences and screening in conformance with Section 3.23 may be required by the planning commission to protect adjoining property.

DD. Planned Unit Developments (PUD's)

1. Planned Unit Developments shall only be located in AG-1, AG-2, AG-3, R-1, R-2, L-R, C-1 and I-1 Districts. ***(92-08 Eff. January 21, 1993)***

2. The standards specified in Article 13 shall apply to all Planned Unit Developments.

EE. Private Indoor Entertainment Facilities (such as family type functions, funeral dinners, wedding, reunions, and other similar activities), Fraternal Organizations and Lodge Halls *(99-03 Eff. September 11, 1999)*

1. They are located in AG-2 Districts.

2. All uses, operations and structures permitted herein, including fences, fronting any public road or thoroughfare used for access or exit purposes shall be landscaped in accordance with plans approved by the Planning Commission.

3. No principal or accessory building shall be closer than 50 feet from any abutting residential district or within 100 feet of any existing residential dwellings.

FF. Public and Institutional Uses

1. Public and Institutional uses shall only be located in AG-1, AG-2, AG-3, R-2 and L-R Districts. Pubic parks also are allowed in R-1 Districts. ***(94-03 Eff. January 31, 1995)***

2. Such use shall be in conformance with the character of the adjacent neighborhood and shall be essential to service the neighborhood or community.

3. The planning commission shall establish requirements for setback, lot size, side yard, parking, screening and other conditions necessary for the use to conform with the character of the adjacent neighborhood.

4. Maximum lot size shall be 10 acres in AG-1 and AG-2 Districts, except for linear parks. ***(94-03 Eff. January 31, 1995)***

GG. Racetracks

1. Racetracks shall only be located in C-2 Districts.

2. Racetracks shall be enclosed with an obscuring screen fence or planting in accordance with Section 3.23 and as required by the planning commission.

3. All racing activities shall be located at least 1,000 feet from any residential districts.

HH. Recycling Drop-Off Sites

1. Such uses may be located in all districts. ***(92-08 Eff. January 21, 1993)***

2. Setbacks shall be 100 feet from any existing residence. ***(92-08 Eff. January 21, 1993)***

3. Site shall be supervised during hours of operation, or receptacle shall be provided to ensure complete containment of materials.

4. Operations shall be conducted in such a way that will control litter and pestilence, and will not contribute to unsightliness.

II. Restaurants

1. Restaurants are allowed as a special use in L-R and C-2 Districts, and as a permitted use in C-1 Districts. ***(89-05 Eff. January 26, 1990)***

2. In establishments where alcoholic beverages or entertainment are permitted, no building shall be located closer than 100 feet to any residential district.

3. All refuse containers shall be located in the rear yard and be screened from view with a solid fence or wall in accordance with Section 3.23.

JJ. Rural Production and Processing Facilities *(02-05 Eff. February 11, 2003)*

1. Rural Production and Processing Facilities shall only be located in the AG-1, AG-2, and AG-3 Districts.

2. The hours of operation shall be limited to 7:00 a.m. to 7:00 p.m.

3. All facilities shall be setback at least 100 feet from all property lines and 250 feet from any property line that contains a residential use.

4. All activities, including storage, shall be conducted within the enclosed building.

5. Only contracted sales of items produced on site are permitted on the premises with no visible change of the outside appearance evident in the conduct of the activity.

6. Activities shall be restricted to a cumulative building area not to exceed a maximum of 10,000 square feet. ***(13-02 Eff. February 18, 2013)***

7. The facility shall be limited to seven (7) employees on site at one time who do not live on the premises; employee parking shall meet the requirements of Section 5.11.

8. A visual screen shall be created along the adjoining boundaries of properties zoned or used for residential purposes. The screen shall consist of one of the following:

   a. A solid fence a minimum of six (6) feet in height, or

b. A landscaped buffer of at least twenty (20) feet in width located between the proposed use and the adjoining residential use, consisting of a hedge or plant material barrier, wall, berm, or combination of these elements to form a continuous barrier at least six (6) feet in height.

9. All exterior dumpsters or trash containers shall be screened on four (4) sides with an opaque or solid fence or wall at least four (4) feet in height.

10. The applicant will submit and be subject to a waste disposal plan approved by the Planning Commission.

KK. Salvage Yards

1. They shall only be located within AG-2 and I-1 Districts.

2. All uses shall be established and maintained in accordance with all applicable state and county laws.

3. The site shall be a minimum of three acres.

4. A solid fence or wall eight feet in height in accordance with Section 3.23 shall be provided around the periphery of the site to screen said site from surrounding property.

5. All activities shall be confined within the enclosed area. There shall be no stocking of material above the height of the fence or wall, except that movable equipment used on the site may exceed the wall or fence height. No equipment, material, signs or lighting shall be used or stored outside the enclosed area.

6. All enclosed areas shall be set back at least 100 feet from any front street or property line and 1,000 feet from any residential district. Such setbacks shall be planted with trees, grass and shrubs to minimize the appearance of the installation. The spacing and type of plant materials shall be in accordance with Section 3.23 and shall be approved by the planning commission.

7. No open burning shall be permitted. All industrial processes involving the use of equipment for cutting, compressing or packaging shall be conducted within a completely enclosed building.

LL. Septage Waste Storage Facilities *(10-02 Eff. August 2, 2010)*

1. SWSF shall only be located in the Ag-1, Ag-2 and I-1 Districts.

2. The minimum lot size upon which a SWSF may be located shall be 10 acres in the Ag-1 and Ag-2 Districts.

3. In the I-1 district all SWSF shall have an impermeable cover.

4. All SWSF shall comply with the rules, regulations and standards established by Federal, State and Local governing bodies.

5. SWSF that have an impermeable cover shall be at least 200 feet from any property line and at least 750 feet from any existing neighboring residential dwelling. These are the minimum setback requirements regardless of Federal, State or other Local regulations. However, if Federal, State or other Local regulations require a larger setback, the SWSF must comply with the larger setback requirements.

6. An uncovered SWSF shall be at least 300 feet from any property line and at least 1320 feet from any existing neighboring residential dwelling. These are the minimum setback requirements regardless of Federal, State or other Local regulations. However, if Federal, State or other Local regulations require a larger setback, the SWSF must comply with the larger setback requirements.

7. All SWSF shall be at least 1320 feet from any residential district.

8. The Planning Commission may establish additional setback requirements if deemed necessary for the general health and welfare of the public.

9. All above ground SWSF shall be surrounded by a berm that is sealed and certified by a Michigan Registered Professional Engineer to contain the septage waste in the event of a catastrophic structural failure. The berm shall be completely installed prior to any septage waste being stored at the facility.

10. All SWSF shall be located outside of a designated 100-year floodplain.

11. A security fence at least six (6) feet in height, but not more than ten (10) feet, shall be constructed around any uncovered SWSF. The Planning Commission may require a security fence around an SWSF that have an impermeable cover.

12. A minimum ten (10) feet wide landscaped buffer or other appropriate greenbelt for screening purposes shall be constructed along any and all sides of the proposed SWSF. The planning commission may require additional landscaping around the SWSF.

MM. Solid Waste Disposal Areas

Solid waste disposal areas shall be located in Ag-2 and I-1 Districts. These uses shall meet all of the requirements of the Solid Waste Management Act, Act 641 of 1978 and the Isabella County Solid Waste Management Plan.

NN. State Licensed Residential Facilities

State Licensed Residential Facilities as defined an properly licensed by Act 218 P.A. of 1979 and Act 116 of 1973 as amended, which provide resident services for seven or more persons under 24 hour supervision shall only be permitted in AG-1, AG-2 and AG-3 Districts. ***(98-01 Eff. November 28, 1998)***

OO. Utility Grid Wind Energy Conversion Systems (WECS), On Site WECS over 66 feet in height, and Anemometer Towers over 66 feet in height. *(08-10 Eff. November 3, 2008)*

1. Such facilities are permitted by special use in the AG-1, AG-2 and AG-3 Districts.

2. In addition to the applicable information required by Article 11, the application shall include:

   a. Location of overhead electrical transmission or distribution lines.

   b. Location and height of all buildings, structures, towers, security fencing and other above ground structures associated with the WECS.

   c. Location and height of all adjacent buildings, structures, and above ground utilities located within three hundred (300) feet of the proposed WECS or Anemometer Tower. Specific distances to other on-site buildings, structures, and utilities shall also be provided.

   d. Existing and proposed setbacks of all structures located on the property.

   e. Sketch elevation of the premises accurately depicting the proposed WECS and its relationship to all structures within three hundred (300) feet. For wind farms in which case numerous WECS of similar height are planned, sketches are necessary only at borders of proposed project and when adjacent to other established structures within three hundred (300) feet.

f. Access road to the WECS and Anemometer Tower with detail on dimensions, composition, and maintenance.

g. Planned security measures to prevent unauthorized trespass and access.

h. A copy of the manufacturer's installation instructions shall be provided. Included as part of or as an attachment to the installation instructions shall be standard drawings of the structural components of the wind energy conversion system and support structures, including base and footings provided along with engineering data and calculations to demonstrate compliance with the structural design provisions of the County Building Code; drawings and engineering calculations shall be certified by a registered engineer licensed to practice in the State of Michigan.

i. An analysis on potential shadow flicker at occupied structures. The analysis shall identify the locations of shadow flicker that may be caused by the project and the expected durations of the flicker at these locations from sunrise to sunset over the course of a year. The analysis shall identify problem areas where shadow flicker may affect the occupants of the structures and describe measures that shall be taken to eliminate or mitigate the problems.

j. A decommissioning plan that shall include the anticipated life of the project, the estimated decommissioning costs net of salvage value in current dollars, the method of ensuring that funds will be available for decommissioning and restoration and the anticipated manner in which the project will be decommissioned and the site restored.

3. WECS and Anemometer Towers shall be setback from the closest property line one (1) foot for every one (1) foot of tower height.

4. WECS and Anemometer Towers shall not be located within thirty (30) feet of an above ground utility line.

5. The minimum vertical blade tip clearance from grade shall be 20 feet for a WECS employing a horizontal axis rotor.

6. WECS and Anemometer Towers shall comply with all applicable state construction and electrical codes and local building permit requirements. WECS and Anemometer Towers shall comply with Federal Aviation Administration requirements, the Michigan Airport Zoning Act (PA 23 of 1950), the Michigan Tall Structures Act (PA 259 of 1959) and any local jurisdiction airport overlay zone regulations.

7. WECS shall comply with all applicable parts of the Michigan Natural Resources and Environmental Protection Act (Public Act 451 of 1994, as amended).

8. WECS shall have automatic braking, governing, or a feathering system to prevent uncontrolled rotation or over speeding.

9. WECS shall be grounded to protect against natural lightning strikes in conformance with the State Electrical Code.

10. WECS and Anemometer Towers shall not have affixed or attached any lights, reflectors, flashers or any other illumination, except for illumination devices required by Federal regulations. All required lighting shall be shielded to the extent possible to reduce glare and visibility from the ground.

11. WECS shall be of monopole design and shall not have guy wires.

12. If the Anemometer Tower is supported by guy wires, the wires shall be clearly visible to a height of at least six (6) feet above the guy wire anchors.

13. Noise emanating from the WECS shall not exceed 55 dB(A) at the property line closest to the WECS. This sound pressure level may be exceeded during short term events such as utility outages and/or severe wind storms. If the ambient sound pressure level exceeds 55dB(A), the standard shall be ambient dB(A) plus 5 dB(A).

14. Color and surface treatment of the WECS and supporting structures shall minimize disruption of the natural characteristics of the site. No lettering, company insignia, advertising or graphics shall be on any part of the tower, hub or blades of the WECS.

15. Each WECS shall have one sign posted at the base of the tower containing the following information:

    a. Warning high voltage.

    b. Manufacturer's name.

    c. Emergency phone number.

    d. Emergency shutdown procedures.

16. Signage placed at the road access shall be used to warn visitors about the potential danger of falling ice.

17. WECS and Anemometer Towers shall be designed and constructed so as not to cause radio and television interference.

18. No WECS shall produce vibrations humanly perceptible beyond the property on which it is located.

19. No WECS shall be interconnected with a local electrical utility company until the utility company has reviewed and commented upon it. The interconnection of the WECS with the utility company shall adhere to the State Electrical Code as adopted by the County.

20. The on-site electrical transmission lines connecting the WECS to the public utility electricity distribution system shall be located underground.

21. The County hereby reserves the right upon issuing any WECS or Anemometer Tower special land use permit to inspect the premises on which the WECS is located. If a WECS is not maintained in operational condition and poses a potential safety hazard, the owner shall take expeditious action to correct the situation.

ARTICLE 13
PLANNED UNIT DEVELOPMENTS (PUD)

SECTION 13.01 INTENT AND PURPOSE

A. The Planned Unit Development is a method by which creative large scale development of land is encouraged in appropriate locations. The PUD is a device which makes use of varying lot sizes and integrates different building structures. Typically, structures in these developments are clustered in such a manner as to achieve the same overall density that would be achieved if the developer had laid out the development in the conventional grid zoning pattern. In addition to the clustered structures, open spaces are provided to insure recreational opportunities. It is not the intent of this Ordinance that a Planned Unit Development allows uses that are prohibited in any district. ***(95-03 Eff. June 20, 1997)***

B. The general objectives of this Article are as follows:

1. To provide more desirable living, shopping and working environments by preserving the natural character of open fields, stands of trees, brooks, ponds, floodplains, hills and similar natural assets.

2. To encourage with regard to residential use the provision of open space and the development of recreational facilities and neighborhood commercial facilities in a generally central location within reasonable distance of all living units.

3. To encourage developers to use a more creative and imaginative approach in the development of residential areas, especially through the mixture of several housing types in one development.

4. To encourage underground utilities which can be more efficiently designed when master planning a larger area.

5. To allow phased construction with the knowledge that subsequent phases will be approved as originally planned and approved by the county.

6. To promote more efficient and aesthetic use of open areas.

SECTION 13.02 LEGISLATIVE FINDINGS

It is hereby determined that through careful land use and site planning, substantial tracts of land which are not fully in conformance with the provisions of this ordinance, but are not harmful to the public health, safety and welfare may be beneficial to the community through improved efficiency.

SECTION 13.03 PREAPPLICATION CONFERENCE

A. Before submitting an application for approval of a PUD, the applicant shall confer in a meeting with a review committee appointed by the planning commission to obtain information and guidance regarding land development regulations, the county's Comprehensive Plan and the application process. At the pre-application conference, the applicant shall submit a preliminary sketch plan for the proposed PUD. All maps shall show enough of the surrounding area to demonstrate the relationship of the PUD to adjoining uses, both existing and proposed. The review committee shall review the preliminary sketch plan to determine its conformance with the intent of this Article and the county's Comprehensive Plan.

B. The maps which are a part of the preliminary sketch plan may be in general, schematic form and must contain the following:

1. A recent map of the site, reflecting area size and boundary line dimensions.

2. Existing and proposed land uses and their approximate locations.

3. Existing topographic character of the site.

4. The character, approximate net residential density and expected final population of the proposed PUD.

5. Circulation patterns including pedestrian walkways and arterial, collector or local streets.

6. Any proposed public or common use areas including schools, parks, open space, etc.

7. Existing floodplains, bodies of water and other unbuildable areas.

SECTION 13.04 FINAL APPLICATION

A. Upon completion of the preapplication review, an application may be submitted to the planning commission. Such application shall be accompanied by the following:

1. An application fee.

2. A completed site plan as required in Article 11 provided that if the PUD is to be developed in phases, a sketch site plan may be accepted for the entire site and a detailed site plan shall be submitted for each phase as approval is sought.

3. A development schedule indicating:

   a. Approximate date for commencement of construction.

   b. Phases, if any, in which the project will be built and the expected starting and completion dates of each project.

   c. Size and location of each area of common use for recreation or open space purposes which will be completed at each phase.

4. Proposed agreements, covenants, deed restrictions or other provisions which are proposed to govern the use, maintenance and continued protection of the PUD and any of its common use and open areas.

5. The following additional information may also be required at the discretion of the planning commission.

   a. A description of the proposed operation in sufficient detail to indicate the noise, smoke, odor, vibration, dust and dirt, noxious gases, glare and heat, fire hazards, industrial wastes and traffic which may be produced by such operation.

   b. Engineering and architectural plans for controlling problems of the type enumerated above, if deemed necessary by the developer or if required by the planning commission or their authorized representative.

   c. Final development architectural sketches or general specifications as to the type of construction materials to be used in the proposed PUD.

   d. A market analysis, stating the economic justification and need for the establishment of the type and size proposed by the applicant.

   e. A traffic survey, prepared by a qualified traffic engineer, indicating the effect of the proposed shopping center on adjacent streets. Said survey shall disclose the points of origin, direction and amount of traffic flow to and from the proposed PUD as well as adequate means of ingress and egress.

   f. Engineering and architectural plans for: The treatment and disposal of sewage; the disposal of storm waters from roof, parking lots, and all hard surfaced areas of the development; and the proposed handling of traffic congestion, glare, air pollution, fire or safety hazards.

B. Upon receipt of the application and accompanying materials, the planning commission shall conduct a public hearing, notice of which shall be given in accordance with the statutory requirements for special land uses. In formulating its decision, the planning commission shall consider the following:

1. General requirements for special land uses as stated in Section 12.03.

2. General objectives of a PUD as stated in Section 13.01.

3. Specific purpose, qualifying conditions, permitted uses and applicable requirements for the district in which the proposed PUD is located.

C. Final approval or disapproval of the site plan shall be made by the planning commission. The planning commission shall prepare a report stating its conclusions on the request for a Planned Unit Development, the basis for its decision to approve or disapprove the request, the decision and the conditions relating to that approval. A copy of the report and the approved final site plan, shall be forwarded to the county clerk.

D. The planning commission is specifically authorized to require the recording of a plat in connection with any such application when such would be required by Act 288 of the Public Acts of 1967, as amended, the Subdivision Control Act.

SECTION 13.05 PERMITTED USES

A. The following uses may be permitted within the districts in which the PUD is located. It is not the intent of this Ordinance that a Planned Unit Development allow uses that are prohibited in any district. ***(95-03 Eff. June 20, 1997)***

1. AG-1 Districts. All uses allowed by right within the AG-1 District, plus the following uses:

   a. Condominium Projects and Condominium Subdivisions. ***(95-03 Eff. June 20, 1997)***

   b. Residential subdivisions.

2. AG-2 Districts. All uses allowed by right within the AG-2 District, plus the following uses:

   a. Condominium Projects and Condominium Subdivisions. ***(95-03 Eff. June 20, 1997)***

   b. Residential subdivisions.

3. AG-3 Districts. All uses allowed by right within the AG-3 District, plus the following uses:

   a. Clubhouse and golf course.

   b. Condominium Projects and Condominium Subdivisions. ***(95-03 Eff. June 20, 1997)***

   c. Hospitals.

   d. Housing of aged.

   e. Multi-family dwellings.

   f. Nursery schools.

   g. Nursing homes.

   h. Public and private campgrounds.

   i. Recreational parks.

   j. Residential subdivisions.

4. R-1 Districts. All uses allowed by right within the R-1 District, plus the following uses: ***(95-03 Eff. June 20, 1997)***

   a. Condominium Projects and Condominium Subdivisions ***(95-03 Eff. June 20, 1997)***

5. R-2 Districts. All uses allowed by right within the R-2 Districts plus the following uses:

   a. Condominium Projects and Condominium Subdivisions. ***(95-03 Eff. June 20, 1997)***

   b. Multi-family dwellings.

6. L-R Districts. All uses allowed as a special or permitted land use within the L-R District, plus the following uses:

   a. Condominium Projects and Condominium Subdivisions. ***(95-03 Eff. June 20, 1997)***

   b. Multi-family dwellings.

c. Specialty shops.

7. C-1 and C-2 Districts. All uses allowed by right in their respective districts.

8. I-1 Districts. All uses allowed by right within the I-1 Districts including industrial parks.

B. The planning commission may have the discretion to allow mixed use developments provided that no more than 25% of the land and floor area of the proposed PUD is devoted to a use that is not specially permitted in this Section.

SECTION 13.06 REQUIRED CONDITIONS FOR PUD'S

The following minimum conditions and requirements shall be complied with and shown on all plans and specifications.

A. Density. The density of the Planned Unit Development shall not exceed the density of the district in which the proposed PUD is located except that the planning commission may authorize a density increase of up to 15 percent where evidence is documented which shows no adverse effect on public services and facilities, on adjacent properties, the natural environment or county plans, provided that an equal amount of land is preserved as usable open space (not including wetlands). In determining the gross site area of the proposed development, wetlands or land within the floodplain shall not be included. The density standards contained in Section 13.06 (N) below shall also be required for Condominium Projects and Condominium Subdivisions. ***(95-03 Eff. June 20, 1997)***

B. Open Space Conservation Provision ***(03-01 Eff. March 14, 2003)***

1. The purpose of this provision is as follows:

a. To provide optional open space conservation provisions for residential development, as required by Public Act 178, 2001.

b. To encourage greater flexibility and efficiency in the design of single-family residential developments.

c. To conserve open space and other important elements of the County's rural character, including farmlands, woodlots, wildlife areas, and scenic areas.

2. These provisions apply to the following conditions:

a. All lots created after the effective date of this amendment in the zoning districts where residences are permitted by right at a density

of two (2) dwelling units per acre or less; including (AG-1) Restrictive Agriculture, (AG-2) General Agricultural, (AG-3) Agricultural Buffer, (R-1) Low Density Residential, (R-2) Medium Density Residential and (L-R) Lakes Area Residential Districts.

b. All site condominium and planned unit development (PUD) projects as permitted elsewhere in this Ordinance and subject to all applicable requirements of Articles 12 and 13.

3. An applicant who wishes to utilize the open space development option of this section shall submit an Open Space Concept Plan for review by the Zoning Administrator and the Planning Commission. The plan shall be prepared in accordance with Article 11 and shall portray the development of the dwelling units in a manner so that at least fifty percent (50%) of the land area of the site shall remain in a perpetually undeveloped state. "Undeveloped state" shall have the same meaning as specified in Public Act 178, 2001; that is, a natural state preserving natural resources, natural features, or scenic or wooded conditions; agricultural use; open space; or a similar use or condition.

4. The proposed development shall also comply with the following requirements:

a. The proposal shall comply with all requirements of the Central Michigan District Health Department, Isabella County Road Commission, and other applicable State or local agencies.

b. The proposal shall comply with the Land Division Act.

c. At least fifty percent (50%) of the project land area shall remain perpetually in an undeveloped state, as previously defined in this section, by means of a conservation easement, plat dedication, restrictive covenant, or other legal means acceptable to Isabella County.

C. Height. A dwelling or principal building shall be not more than two and one-half stories, nor exceed 35 feet in height. Accessory buildings shall not exceed a height of 20 feet.

D. Building Space: The lot area (except where otherwise noted in this Section), and the front, side and rear yard requirements of the District in which the PUD is located shall serve as the building space standards for all PUDs, although the Planning Commission has the discretion of altering these standards where the Planning Commission determines that the alteration is best suited to the intent of the Ordinance. ***(95-03 Eff. June 20, 1997)***

E. Useable Open Space. A minimum usable open space area of 30 square feet per dwelling shall be provided within group housing developments. Such open space shall be provided at ground level, unoccupied by principal or accessory buildings, and available to all occupants of the group housing development. Each open space area, so provided, shall have a minimum total area of 1,200 square feet and shall be unobstructed to the sky. It shall not be devoted to service driveways or off street parking or loading space, but shall be usable for greenery, drying yards, recreational space and other leisure activity.

F. Closed Courts. No closed courts shall be permitted. Open arcades or garden walls not over six feet in height shall not be deemed enclosing features.

G. Lot Area. Minimum site areas for a Planned Unit Development shall be as follows:

1. Residential PUD's shall have a minimum lot size of five acres.

2. Commercial PUD's shall have a minimum lot size of 3 acres.

3. Industrial PUD's shall have a minimum lot size of 5 acres and industrial parks shall have a minimum lot size of 20 acres.

4. Mixed use PUD's shall have a minimum lot size of 10 acres.

H. Lot Width. The minimum width for a lot used for group housing shall be that area necessary for achieving open space requirements and yard requirements.

I. Parking and Signs. Off-street parking and signs shall meet the provisions in the respective zoning district.

J. Environmental Design. Planned Unit Developments shall be designed to enhance environmental features such as the preservation of trees, flood plains, natural areas and shall promote proper site landscaping.

K. Circulation. Standards for circulation of traffic shall be specified by the Isabella County Road Commission. This shall include the relationship on internal circulation systems to external collectors and arterials, as well as the relationships of streets to structures. This shall also include standards governing private streets.

L. Utilities. Standards for public utilities shall vary due to geographical area and existing soil of proposed PUD's. The Central Michigan District Health Department and the planning commission shall establish and maintain standards for public utilities.

M. Perimeter Area. To ensure the PUD is compatible with adjacent land uses, there shall be a buffer zone surrounding the development. This buffer zone shall be left to the discretion of the planning commission to ensure uniformity with adjacent districts.

N. Dwelling Unit Size. The minimum building dimension requirements of the District in which the PUD is located shall serve as the dwelling unit size standards for all PUDs although the Planning Commission has the discretion of altering these standards where the Planning Commission determines that the alteration is best suited to the intent of the Ordinance. ***(95-03 Eff. June 20, 1997)***

O. Condominium Projects & Condominium Subdivisions. ***(95-03 Eff. June 20, 1997)*** To ensure that Condominium Projects and Condominium Subdivisions are regulated in a manner similar to, and are entitled to the same privileges as, any other lot or development regulated by this Ordinance, along with all other pertinent standards of this Ordinance, the following standards shall also be required for Condominium Projects and Condominium Subdivisions:

1. Condominium Projects and Condominium Subdivisions shall only be allowed as a Planned Unit Development (PUD) and located in the AG-3, R-1, R-2, and L-R Districts and are subject to the rules and regulations of Article 13 and all other applicable sections of this Ordinance.

2. All Condominium Projects and Condominium Subdivisions shall meet all standards of this Ordinance.

3. All Condominium Projects and Condominium Subdivisions shall include the following information and that required by Section 66 of the Condominium Act (59 PA 1978, MCL 559.101 et. Seq.), and shall comply with all rules promulgated by the Department of Consumer and Industry Services, formerly known as the Department of Commerce:

   a. A cover sheet;

   b. A survey plan of the Condominium Project;

   c. A flood plain plan, if the project lies within or abuts a flood plain area;

   d. A site plan showing size, location, shape, area, depth and width of all condominium units and all adjoining common elements including those enclosed or adjoining;

   e. A utility plan showing all sanitary sewer, water and storm sewer lines and their respective easements;

f. Floor plans for a Condominium Project;

g. The proposed phases of the Condominium Project or Condominium Subdivision;

h. A number assigned to each Condominium Unit;

i. The vertical boundaries and volume for each Condominium Unit comprised of enclosed air space;

j. The existing and proposed structures and improvements including their location on the land. Where separate Condominium Units within a single structure are proposed, then building sections shall be illustrated for all proposed structures and improvements. Any proposed structure or improvement shown shall be labeled either "must be built" or "need not be built". To the extent that the developer is contractually obligated to deliver utility conduits, buildings, sidewalks, driveways, landscaping and access roads, the same shall be shown and designated as "must be built", but the obligation to deliver such items exists whether or not thy are so shown and designated;

k. The nature, location and approximate size of the general and limited common elements and the location of proposed building(s) used for common purposes;

l. The location of wetlands and a Department of Environmental Quality, formerly known as the Department of Natural Resources, wetland determination verification, if applicable;

m. Applicant shall provide a legal description, evidence of marketable or insurable title, and a copy of the proposed bylaws for the Condominium Project;

n. Applicant shall provide a copy of the Master Deed including all restrictions and covenants for the Condominium Subdivision, or a copy of all deed restrictions for a Condominium Project which is not processed as a Condominium Subdivision;

o. Applicant shall provide all information required by this Ordinance for Private Road development, if the project is proposed to have private roads;

p. Applicant shall submit preliminary site plans for the Condominium Project or Subdivision to the following agencies for their review and approval: Isabella County Road Commission, Isabella County

District Health Department, Isabella County Drain Commission, Michigan Department of Environmental Quality, formerly known as the Department of Natural Resources, and any other appropriate state and county review and enforcement agencies having direct approval or permitted authority over all or part of the project's construction phases.

4. Additional Requirements. In addition to the other standards contained in this Ordinance, the following shall apply to Condominium Projects and Condominium Subdivisions:

   a. Applicant must provide adequate common public area, common facilities and structures for storage and use of equipment and maintenance items;

   b. If the Condominium Project or Condominium Subdivision incorporates one or more accessory buildings or structures or storage facilities for the common use of the Condominium Units, then additional minimum common area square footage shall be required to accommodate such structure(s) or facility(s);

   c. The dwelling portion of the Condominium Units shall meet the minimum standards for dwelling units for the district in which they are located although the Planning Commission has the discretion of altering these standards where it is demonstrated that adequate common enclosed facilities are provided;

   d. Adequate utility easements are required for conservation, operation, and maintenance and must be shown on the site plan, and if public utilities are available the developer must utilize them;

   e. Adequate plans for maintenance of all common areas for preservation of natural features and measures for soil conservation shall be made a part of the site plan and Master Deed.

5. Final Approval.

   a. Prior to the issuance of a zoning permit for any work to be done on land within Condominium Subdivision or Condominium Project area, or phase thereof, the following must be provided by the applicant:

      (1) A copy of an acceptable final Master Deed;

      (2) A copy of the filed articles of organization or incorporation for the condominium association;

(3) A copy of an acceptable improvement plan;

(4) Evidence of block grading, floodway, and soil erosion approval;

(5) Evidence of security methods for non-completed construction;

(6) Evidence of approval of the final Site Plan for the Condominium Project;

(7) Documentation that the agencies listed in Section 13.06(O)(3)(p) have approved the plans for the condominium, as applicable;

(8) Evidence that offsite impact issues have been addressed in the project.

b. Prior to the issuance of a building permit for any work to be done in the Condominium Project or Condominium Subdivision, or phase thereof, the following items must be fulfilled:

(1) Construction of adequate facilities for hydrant water, adequate fire access, storm water detention, drainage, floodways, and soil erosion controls;

(2) Monuments shall be located in the ground in accordance with the rules promulgated by the Michigan Department of Consumer and Industry Services, formerly known as the Michigan Department of Commerce.

SECTION 13.07 PERFORMANCE BONDS

Performance bonds relating to the PUD shall be used to ensure that necessary facilities are constructed and conditions are met. These bonds may coincide with a phasing program. Both the phasing program and performance bonds shall be established by the planning commission. The minimum amount of the bonds shall be $1,000 per acre, although the planning commission has the discretion of increasing this amount if conditions warrant.

ARTICLE 14
ZONING BOARD OF APPEALS

SECTION 14.01 APPOINTMENT

The county board of commissioners shall appoint a county zoning board of appeals who shall act upon questions which may arise in the administration of the ordinance and as herein provided.

A. The zoning board of appeals shall consist of 5 members which are electors residing within Isabella County, but outside of any city or village. One member shall also be a member of the planning commission. ***(08-04 Eff. June 2, 2008)***

B. Alternates ***(07-03 Eff. March 7, 2007)***

1. The Board of Commissioners may appoint up to two (2) alternate members for the same term as regular members of the Board.

2. An alternate member may be called to serve in place of a regular member of the Board in the absence of a regular member or for the purpose of reaching a decision in a case where the regular member has abstained for reasons of conflict of interest.

3. The alternate member having been called shall serve on the Board until a final decision is made on the application(s) for which the member was called.

4. When serving as a member, an alternate member shall have the same voting rights as a regular member of the Board.

SECTION 14.02 PROCEDURES OF THE BOARD OF APPEALS

The board shall have the power to adopt rules and regulations not inconsistent with law or with the provisions of this and any other ordinances of Isabella County.

A. Meetings of the board shall be held at the call of the Chairperson and at such other times as the board may determine. The Chairperson or in his absence the Acting Chairperson, may administer oaths and compel the attendance of witnesses.

B. Public notice of the time, date and place of the meeting shall be given in the manner required by Act 267 of the Public Acts of 1976.

C. The board shall act by resolution. The concurring vote of a majority of the members of the board shall be necessary to reverse any order, requirement, decision or determination of the zoning administrator; or to decide in favor of an

applicant on any matter upon which is required to pass under this ordinance. ***(08-09 Eff. October 25, 2008)***

D. The board may call upon the county departments for assistance in the performance of its duties. It shall be the duty of such departments to render such assistance to the board as may reasonably be required.

SECTION 14.03 POWERS

The board is herby granted all powers provided under Act 110 of the Public Acts of 2006, as amended, and shall have powers to interpret provision of this ordinance and grant variances from the strict application of the provisions of this ordinance.

SECTION 14.04 VARIANCE REQUESTS AND PROCEDURES ***(08-07 Eff. July 20, 2008)***

A. A variance from the terms of this ordinance may be requested by any property owner, tenant or governmental agency, department, bureau or board.

B. Under no circumstances shall the board of appeals grant a variance to allow a use not permissible under the terms of this ordinance in said district.

C. Filing Procedures. A written application for a non-use variance must be submitted to the zoning administrator and accompanied by a fee. A non-use variance may be allowed by the Zoning Board of Appeals only in cases where the applicant provides evidence of practical difficulty in the official record of the hearing and demonstrates that all of the following conditions are met:

1. That there are exceptional or extraordinary circumstances or conditions applying to the property that do not apply generally to other properties in the same zoning district. Exceptional or extraordinary circumstances or conditions may include:

   (a) Exceptional narrowness, shallowness or shape of a specific property on the effective date of this Article or amendment.

   (b) By reason of exceptional topographic or environmental conditions or other extraordinary situation on the land, building or structure.

   (c) By reason of the use or development of the property immediately adjoining the property in question.

2. That the variance is necessary for the preservation and enjoyment of a substantial property right similar to that possessed by other properties in the same Zoning District and in the vicinity. The possibility that compliance with this Ordinance may prove to be more expensive or otherwise

inconvenient shall not be part of the consideration of the Zoning Board of Appeals.

3. The variance will not be detrimental to adjacent property and the surrounding neighborhood.

4. The variance will not materially impair the intent and purpose of this Ordinance or the provision from which the variance is requested.

5. That the immediate practical difficulty causing the need for the variance request was not created by the applicant.

SECTION 14.05 DECISIONS *(08-07 Eff. July 20, 2008)*

A. In making any decision provided for in this Article, the Zoning Board of Appeals may attach thereto such conditions regarding the location, character and other features of the application as it may deem reasonable in furtherance of the intent and spirit of this Ordinance and the protection of the public interest or as otherwise permitted by law.

B. Any decision of the Zoning Board of Appeals shall not become final until minutes of the meeting at which final action on the request was taken are officially approved and adopted by the Zoning Board of Appeals, unless the Zoning Board of Appeals shall find the immediate effect of such order is necessary for the preservation of property or personal rights and shall so certify on the record.

C. The decision of the Zoning Board of Appeals shall be final; however, any person having an interest affected by any such decision shall have the right of appeal to the Circuit Court on questions of law and fact.

D. Time Limitations on Variances

1. Any approval given by the Zoning Board of Appeals under which the premises are not used or work is not started within one (1) year, or when the use or work has been abandoned for a period of six (6) months, shall lapse and cease to be in effect.

2. The holder of the variance may, at no cost, request up to one (1) three (3) month extension of the variance from the Zoning Administrator, if applied for in writing prior to the expiration of the variance approval.

3. The Zoning Administrator may only grant an extension when the original circumstances authorizing the variance have not changed and that the circumstances creating the need for the extension were beyond the control of the applicant.

E. No application which has been denied wholly or in part by the Zoning Board of Appeals shall be resubmitted for a period of one (1) year from the date of the last denial, unless permitted by the Zoning Administrator after a demonstration by the applicant of a substantial change of circumstances from the previous application.

SECTION 14.06 APPEAL REQUESTS AND PROCEDURES *(08-07 Eff. July 20, 2008)*

A. An appeal may be taken from any person or any governmental department affected or aggrieved, and review any order, requirement, decision or determination where it is alleged by the appellant that there is error or misinterpretation in any order, requirement, decision, grant or refusal made by the Zoning Administrator or other administrative official or body charged with the enforcement of any Article of this Ordinance.

B. An appeal shall be filed with the Zoning Board of Appeals, using the appropriate form supplied by the Zoning Administrator within twenty-one (21) days of the decision being appealed. The filing shall specify the grounds of the appeal. The appeal shall be transmitted to the Zoning Board of Appeals together with all the papers constituting the record upon which the action being appealed is taken.

C. An appeal shall stay all proceedings in furtherance of the action appealed unless the Zoning Administrator certifies to the Zoning Board of Appeals, after notice of appeal has been filed, that, by reason of the facts stated in the certificate, a stay would cause imminent peril to life or property. In such case, the proceedings shall not be stayed other than by a restraining order, which may be granted by a court of record.

D. The Zoning Board of Appeals shall select a reasonable time and place for hearing the appeal, give due notice thereof to the parties, and render a decision on the appeal without unreasonable delay. A person may appear and testify at the hearing, whether in person or by duly authorized agent or attorney.

E. In deciding the appeal, the Zoning Board of Appeals shall be limited to determining whether or not the decision that was made was done so using the proper standards and guidelines in the Ordinance. The decision of the Zoning Board of Appeals is limited to the information that was available to the administrative official or body who made the decision initially. Additional testimony shall not be allowed.

F. If a determination is made that the administrative official or body making the decision did so improperly, the Zoning Board of Appeals may reverse or affirm, wholly or partly, or may modify, the order, requirement, decision or determination appealed from, and may make such order, requirement, decision or

determination as ought to be made, and to that end shall have all the powers of the administrative official or body from whom the appeal was taken.

G. The Zoning Board of Appeals may hear and decide appeals from the decisions of the Zoning Administrator pertaining to interpretations of the Zoning Map to determine the precise location of boundary lines between Zoning Districts. In making its determination of the boundary lines, the Zoning Board of Appeals shall be governed by the rules of this Section and the provisions of Section 4.05.

SECTION 14.07 HEARING PROCEDURES (APPEALS AND VARIANCE APPLICATIONS)

When the zoning board of appeals receives notification of an appeal being filed, or a request for a variance, it shall fix a reasonable time for a public hearing and give notice of that public hearing as required by Act 110 of the Public Acts of 2006, as amended. ***(07-02 Eff. March 7, 2007)***

A. Notice of said hearing shall be given by one publication in a newspaper published in the county and shall be printed not less than 15 days before the date of such hearing. The notice shall do all of the following:

1. Describe the nature of the request

2. Indicate the property that is the subject of the request. The notice shall include a listing of all existing street addresses within the property. Street addresses do not need to be created and listed if no such addresses currently exist within the property. If there are no street addresses, other means of identification may be used.

3. State when and where the request will be considered.

4. Indicate when and where written comments will be received concerning the request.

B. Not less than 15 days before the date of such hearing a notice containing the aforementioned information shall also be sent, by first class mail or personal delivery, to all persons to whom real property is assessed and to the occupants of all dwellings within 300 feet of the boundary of the property in question, including owner of said property. The notice shall also be sent to the supervisor of the township in which the property in question is located. ***(07-02 Eff. March 7, 2007)***

C. In cases where additional information, site inspections, or other activities may be necessary to make a proper decision, the zoning board of appeals shall have the power to adjourn a hearing to a later date. Announcement of such later date at the original hearing shall be deemed proper public notification.

SECTION 14.08 PERFORMANCE BONDS

The zoning board of appeals shall have authority to require such assurance, surety or performance bond in the form, manner and amount as in its discretion, may be required to compel compliance with and performance of all conditions incident to appeals and requests granted by said board; provided, however, that such requirement shall not be for amounts greater than the reasonable cost of performing or complying with the conditions attached to such decision approval.

ARTICLE 15
ADMINISTRATION AND ENFORCEMENT

SECTION 15.01 ZONING ADMINISTRATOR *(08-09 Eff. October 25, 2008)*

A. Isabella County shall employ a zoning administrator to act as its officer to effect proper administration of this ordinance. The term of employment and rate of compensation and any other conditions of employment shall be established by the county board of commissioners.

B. For the purpose of this ordinance, the zoning administrator or duly authorized representative may enter at all reasonable times in or upon any private or public property for the purpose of inspecting or investigating the condition and practices which may be a violation of this ordinance. A written notice shall be sent to the person, firm or corporation who is deemed to be in violation.

SECTION 15.02 ZONING PERMIT REQUIRED

No building or part thereof, or other structure shall be erected, raised, moved, reconstructed, extended, or enlarged without first applying for and obtaining a zoning permit from the Zoning Administrator. No building, structure, or land shall be used or occupied except in conformance with the provisions of this ordinance. A one-story detached accessory building or structure of 200 square feet or less in area shall not require a zoning permit as long as the placement of said building conforms with the height requirements of the district in which they are located and provided the accessory building or structure is not located closer than five (5) feet from a side or rear lot line. ***(08-09 Eff. October 25, 2008)***

SECTION 15.03 APPLICATION FOR ZONING PERMIT

To obtain a zoning permit a written application is required by this ordinance. The applicant shall ensure himself of the following requirements.

A. Every application for a zoning permit shall be accompanied by plans in duplicate, drawn to scale in ink, or prints of same, showing the actual shape and dimensions of the lot to be built upon. It shall also show the exact locations, size and height of the existing buildings and accessory buildings, and the lines within which the proposed building or structure is to be erected or altered. The existing and intended use of each building, or part of a building; the number of families or housekeeping units the building is designed to accommodate; and such other information with regard to the lot and neighboring lots as may be necessary to determine and provide for the enforcement of this ordinance shall be furnished. One copy of such plans shall be returned to the Owner when such plans have been approved by the zoning administrator together with permit as may be granted. The lot and the location of the building thereon must be staked out on

the ground and inspected by the zoning administrator before construction is started. ***(08-09 Eff. October 25, 2008)***

B. Where sewage disposal is a requirement, the sewage disposal system must be approved by the Central Michigan District Health Department prior to issuing a zoning permit for a new structure and/or prior to approval for change of use of an existing structure.

C. Before a zoning or building permit may be issued, there must be compliance with this ordinance. ***(89-05 Eff. January 26, 1990)***

D. Except as herein after provided, no building, structure or land shall be used or occupied and no building or part thereof, or other structure shall be erected, raised, moved, reconstructed, extended, enlarged or altered, except in conformity with this ordinance.

E. Permits shall be nontransferable and shall expire after one year from the date of issuance, if construction has not progressed in a reasonable manner as determined by the zoning administrator ***(08-09 Eff. October 25, 2008)***.

SECTION 15.04 FEES

A. A fee, as set by the county board of commissioners upon recommendations from the planning commission, subject to annual review, to defray the cost of administration and inspection, shall be paid prior to issuance of any permit.

B. A person undertaking and commencing a use without the proper permit is subject to all the penalties in Section 15.06. In lieu of commencing prosecution, the zoning administrator shall have the option to issue a zoning permit and to charge a double fee therefore. ***(08-09 Eff. October 25, 2008)***

C. Fees shall be established by the board of commissioners for the following:

1. Special Land Use Permits (Article 12)

2. Rezoning Requests (Article 15)

3. Site Plan Review (Article 11)

4. Variance Applications (Article 14)

5. Appeals (Article 14)

6. Temporary Permits (Section 3.27)

7. Private Road Permits (Section 3.22)

8. Zoning Permits (Article 15)

9. Home Occupation Annual Permits (Section 3.16)

10. Other appropriate fees as determined by the board of commissioners.

D. Additional fees for special public hearings or meetings of the planning commission that are requested by applicants of rezoning or special use requests, shall be charged to cover the costs of required notices and membership per diem for the meetings or hearing.

SECTION 15.05 TIME *(94-03 Eff. January 31, 1995)*

A. The time shall be established by the Planning Commission for the submission of applications or requests for the following:

1. Appeal.

2. Home Occupation Annual Permit.

3. Private Road Permit.

4. Site Plan Review.

5. Special Land Use.

6. Temporary Permit.

7. Variance.

8. Zoning Amendments/Rezoning.

9. Zoning Permit.

SECTION 15.06 VIOLATIONS AND PENALTIES

A. Violation of the provisions of this ordinance or failure to comply with any of its requirements, including violations of conditions and safeguards established in various sections of this ordinance, are hereby declared to be a nuisance per se and conviction of such shall constitute a misdemeanor. Any person who violates this ordinance or fails to comply with any of its requirements shall, upon conviction thereof, be fined not more than $100.00 or imprisoned for not more than 90 days, or both, and in addition shall pay all costs and expenses involved in the case. Each day such violation continues after receipt of a violation notice shall be considered a separate offense.

B. The owner or tenant of any building, structure, premises or part thereof, architect, builder, contractor, agent or other person who commits, participates in, assists in or maintains such violation may each be found guilty of a separated offence and suffer the penalties herein provided.

C. Nothing here contained shall prevent the County of Isabella from taking such other lawful action as is necessary to prevent or remedy any violation, nor shall imposition of any fine or jail sentence, or both, exempt the violator from compliance with the provisions of this ordinance.

SECTION 15.07 ADDITIONAL REMEDIES

In addition to the above remedies, the following additional remedies may be instituted.

A. The zoning administrator may institute any appropriate action or proceedings to prevent any erection, construction, alteration, repair, maintenance or use of any building or premises constituting a violation of any of the provisions of this ordinance; to restrain, correct or abate such violation; to prevent any unlawful act, business activity or other use in or about such premises. ***(08-09 Eff. October 25, 2008)***

B. The zoning administrator may initiate a show cause hearing before the board of appeals when said official believes a violation of the zoning ordinance has occurred. The purpose of this hearing is to seek voluntary compliance with the Isabella County Zoning Ordinance; however, the alleged violator or his agents may be allowed an opportunity to show because why the provisions of the ordinance should not be enforced. ***(97-02 Eff. January 2, 1998)***

The show cause haring shall be held under the following guidelines:

1. Notice shall be served by mailing of a notice by first class mail to the property address if occupied of the subject property or to the address of the owner of the property as shown on the most recent tax records of the

township in which the subject property is located not less than 10 days prior to the hearing date. The notice shall contain the purpose of the hearing, the time, date and place it is to be held, a description of the alleged violation and that the owner or violator shall have an opportunity to be heard at the hearing.

2. At the hearing, the zoning administrator shall have the burden of establishing, through the use of witnesses and/or other evidence at the zoning administrator's discretion, that the alleged violation has occurred by a preponderance of the evidence.

3. The owner or violator shall upon establishment of the alleged violation, have the burden of showing good cause why the ordinance should not be enforced, and may present witnesses and/or other evidence at the owner or violator's discretion.

4. At the conclusion of the hearing, the zoning board of appeals shall, within a reasonable time, take such action as it deems necessary or proper, and within the scope of its authority, to effect the intent of those provisions of the zoning ordinance pertaining to the subject matter of the hearing.

5. The hearing and proceedings herein shall not in any way effect or bar criminal prosecution pursuant to Section 15.06 hereof.

C. The zoning administrator is specifically authorized to issue and serve appearance tickets, based on probable cause, on any person, business, or organization in violation of any of the provisions of this zoning ordinance and for which a fine, imprisonment or both may be levied as a result of such violation. ***(08-09 Eff. October 25, 2008)***

Appearance ticket means a complaint or notice upon which the zoning administrator shall record an occurrence involving one or more violations of the zoning ordinance by the person cited. Each citation shall consist of the following parts:

1. The original which shall be a complaint or notice to appear by the zoning administrator and filed with the court.

2. The second copy which shall be retained by the zoning administrator.

3. The third copy which shall be delivered to the alleged violator. Such citation may be appropriately modified as to consent or number of copies to accommodate zoning ordinance enforcement and local court procedures and practices.

SECTION 15.08 AMENDMENTS AND ADOPTION

A. AMENDMENTS

The county board may amend, supplement or change, by ordinance, the boundaries of districts or the regulations herein established, in accordance with the provisions of and in the manner provided by Act 110 of the Public Acts of 2006 of the State of Michigan, as amended. ***(07-02 Eff. March 7, 2007)***

1. Any public agency or interested person may make written request to the county planning commission for an amendment to this zoning ordinance.

2. A fee shall be collected from the applicant sufficient to cover the expenses for said notices and hearings. The planning commission shall have the authority to waive the fee requirements or to refund a fee under specific circumstances. ***(07-02 Eff. March 7, 2007)***

B. PUBLIC HEARING ***(07-02 Eff. March 7, 2007)***

After receipt of a request for a change in the zoning ordinance (text, map or amendments) the planning commission shall hold at least one public hearing.

1. Notice of said hearing shall be given by one publication in a newspaper published in the county and shall be printed not less than 15 days before the date of such hearing. The notice shall do all of the following:

    a. Describe the nature of the request

    b. Indicate the property that is the subject of the request. The notice shall include a listing of all existing street addresses within the property. Street addresses do not need to be created and listed if no such addresses currently exist within the property. If there are no street addresses, other means of identification may be used.

    c. State when and where the request will be considered.

    d. Indicate when and where written comments will be received concerning the request.

2. If the request is to rezone 10 or fewer adjacent properties, a notice containing the aforementioned information shall also be sent, by first class mail or personal delivery, to all persons to whom real property is assessed and to the occupants of all dwellings within 300 feet of the boundary of the property in question, including owner of said property. The notice shall also be sent to the supervisor of the township in which the property in

question is located. This notice shall be sent not less than 15 days before the date of such hearing

3. If the request is to rezone 11 or more adjacent properties, notice of the public hearing shall be given in the same manner as required above, except for the requirement of Section 15.08 (B)(2) and except that no individual addresses of properties are required to be listed under Section 15.08 (B)(1)(b).

C. AMENDMENT GUIDELINES ***(10-01 Eff. August 2, 2010)***

The following guidelines shall be used by the Planning Commission, and may be used by the Board of Commissioners in consideration of amendments to the Zoning Ordinance:

1. Text Amendment:

   a. The proposed text amendment would clarify the intent of the Ordinance.

   b. The proposed text amendment would correct an error in the Ordinance.

   c. The proposed text amendment would address changes to the State legislation, recent case law or opinions from the Attorney General of the State of Michigan.

   d. The proposed text amendment would promote compliance with changes in other County, State, or Federal regulations.

   e. In the event the amendment will add a use to a district, that use shall be fully consistent with the character of the range of uses provided for within the district.

   f. As applicable, the proposed change shall be consistent with the County's ability to provide adequate public facilities and services.

   g. The proposed change shall be consistent with the County's desire to protect the public health, safety, and welfare of the community.

2. Map Amendment (Rezoning):

   a. Whether or not the proposed rezoning is consistent with the goals, policies and future land use map of the Isabella County Master Plan; or, if conditions have changed significantly since the Master

Plan was adopted, the consistency with recent development trends in the area.

b. Whether the proposed district and the uses allowed are compatible with the site's physical, geological, hydrological and other environmental features. The potential uses allowed in the proposed zoning district shall also be compatible with surrounding uses in terms of land suitability, impacts on the community, density, potential influence on property values and traffic impacts.

c. Whether, if rezoned, the site is capable of accommodating the uses allowed, considering existing or planned infrastructure including roads, sanitary sewers, storm sewer, water, sidewalks and road lighting.

d. Other factors deemed appropriate by the Planning Commission.

D. SUBMITTAL TO BOARD OF COMMISSIONERS ***(07-02 Eff. March 7, 2007)***

After the public hearing, the planning commission shall submit the proposed amendment, along with its recommendation and a summary of the public hearing comments to the board of commissioners for their actions.

1. The board of commissioners may adopt or reject the amendment as proposed. However, if the board decides to make any changes, it must return the proposed amendment with changes to the planning commission for review and comment.

2. After receipt of this report, the county board may proceed to adopt the amendment with or without changes.

E. NOTICE OF ADOPTION

A notice of adoption shall be published in a newspaper of general circulation within the county within 15 days after adoption by the Board of Commissioners. Said notice shall include the following: ***(07-02 Eff. March 7, 2007)***

1. In the case of a newly adopted zoning ordinance, the following statement: A zoning ordinance regulating the development and use of land has been adopted by the Isabella County Board of Commissioners.

2. In the case of an amendment to an existing zoning ordinance, either a summary of the regulatory effect of the amendment, including the geographic area affected, or the text of the amendment.

3. The effective date of the ordinance.

4. The place and time where a copy of the ordinance may be purchased or inspected.

SECTION 15.09 CONDITIONAL REZONING *(10-01 Eff. August 2, 2010)*

A. INTENT

It is recognized that there are certain instances where it would be in the best interests of Isabella County, as well as advantageous to property owners seeking a change in zoning boundaries, if certain conditions could be proposed by property owners as part of a request for a rezoning. It is the intent of this Section to provide a process consistent with the provisions of the Michigan Zoning Enabling Act (P.A. 110 of 2006, as amended) by which an owner seeking a rezoning may voluntarily propose conditions regarding the use and/or development of land as part of the rezoning request.

B. APPLICATION AND OFFER OF CONDITIONS

1. An owner of land may voluntarily offer in writing conditions relating to the use and/or development of land for which a rezoning is requested. This offer may be made either at the time the application for rezoning is filed or may be made at a later time during the rezoning process

2. The required application and process for considering a rezoning request with conditions shall be the same as that for considering rezoning requests made without any offer of conditions, except as modified by the requirements of this Section.

3. The owner's offer of conditions may not purport to authorize uses or developments not permitted in the requested new zoning district.

4. The owner's offer of conditions shall bear a reasonable and rational relationship to the property for which rezoning is requested.

5. Any use or development proposed as part of an offer of conditions that would require a special land use permit under the terms of this Ordinance may only be commenced if a special land use permit for such use or development is ultimately granted in accordance with the provisions of this Ordinance.

6. Any use or development proposed as part of an offer of conditions that would require a variance under the terms of this Ordinance may only be commenced if a variance for such use or development is ultimately granted by the Zoning Board of Appeals in accordance with the provisions of this Ordinance.

7. Any use or development proposed as part of an offer of conditions that would require site plan approval under the terms of this Ordinance may only be commenced if site plan approval for such use or development is ultimately granted in accordance with the provisions of this ordinance.

8. The offer of conditions may be amended during the process of rezoning consideration provided that any amended or additional conditions are entered voluntarily by the owner. An owner may withdraw all or part of its offer of conditions any time prior to final action by the County Board of Commissioners provided that, if such withdrawal occurs subsequent to the Planning Commission's public hearing on the original rezoning request, then the rezoning application shall be referred to the Planning Commission for a new public hearing with appropriate notice and a new recommendation.

C. PLANNING COMMISSION REVIEW

The Planning Commission, after public hearing may recommend approval, approval with recommended changes or denial of the rezoning; provided, however, that any recommended changes to the offer of conditions are acceptable to and thereafter offered by the owner.

D. BOARD OF COMMISSIONERS REVIEW

After receipt of the Planning Commission's recommendation, the Board of Commissioners shall deliberate upon the requested rezoning and may approve or deny the conditional rezoning request. Should the Board of Commissioners consider amendments to the proposed conditional rezoning advisable and if such contemplated amendments to the offer of conditions are acceptable to and thereafter offered by the owner, then the Board of Commissioners may, in accordance with the Michigan Zoning Enabling Act, refer such amendments to the Planning Commission for a report thereon within a time specified by the Board of Commissioners and proceed thereafter in accordance with said statute to deny or approve the conditional rezoning with or without amendments.

E. APPROVAL

1. If the Board of Commissioners finds the rezoning request and offer of conditions acceptable, the offered conditions shall be incorporated into a formal written Statement of Conditions acceptable to the owner and conforming in form to the provisions of this Section. The Statement of Conditions shall be incorporated by attachment or otherwise as an inseparable part of the ordinance adopted by the Board of Commissioners to accomplish the requested rezoning.

2. The Statement of Conditions shall:

   a. Be in a form recordable with the Isabella County Register of Deeds or, in the alternative, be accompanied by a recordable Affidavit or Memorandum prepared and signed by the owner giving notice of the Statement of Conditions in a manner acceptable to the Board of Commissioners.

   b. Contain a legal description of the land to which it pertains.

   c. Contain a statement acknowledging that the Statement of Conditions runs with the land and is binding upon successor owners of the land.

   d. Incorporate by attachment or reference any diagram, plans or other documents submitted or approved by the owner that are necessary to illustrate the implementation of the Statement of Conditions. If any such documents are incorporated by reference, the reference shall specify where the document may be examined.

   e. Contain a statement acknowledging that the Statement of Conditions or an Affidavit or Memorandum giving notice thereof may be recorded by Isabella County with the Isabella County Register of Deeds.

   f. Contain the notarized signatures of all of the owners of the subject land preceded by a statement attesting to the fact that they voluntarily offer and consent to the provisions contained within the Statement of Conditions.

3. Upon the rezoning taking effect, the Zoning Map shall be amended to reflect the new zoning classification along with a designation that the land was rezoned with a Statement of Conditions. The County Clerk shall maintain a listing of all lands rezoned with a Statement of Conditions.

4. The approved Statement of Conditions or an affidavit or Memorandum giving notice thereof shall be filed by Isabella County with the Isabella County Register of Deeds. The Board of Commissioners shall have the authority to waive this requirement if it determines that, given the nature of the conditions and/or the time frame within which the conditions are to be satisfied, the recording of such a document would be of no material benefit to the County or to any subsequent owner of the land.

5. Upon the rezoning taking effect, the use of the land so rezoned shall conform thereafter to all of the requirements regulating use and

development within the new zoning district as modified by any more restrictive provisions contained in the Statement of Conditions.

F. COMPLIANCE WITH CONDITIONS

1. Any person who establishes a development or commences a use upon land that has been rezoned with conditions shall continuously operate and maintain the development or use in compliance with all of the conditions set forth in the Statement of Conditions. Any failure to comply with a condition contained within the Statement of Conditions shall constitute a violation of this Zoning Ordinance and be punishable accordingly. Additionally, any such violation shall be deemed a nuisance per se and subject to judicial abatement as provided by law.

2. No permit or approval shall be granted under this Ordinance for any use or development that is contrary to an applicable Statement of Conditions.

G. TIME PERIOD FOR ESTABLISHING DEVELOPMENT OR USE

Unless another time period is specified in the Ordinance rezoning the subject land, the approved development and/or use of the land pursuant to building and other required permits must be commenced upon the land within 18 months after the rezoning took effect and thereafter proceed diligently to completion. This time limitation may upon written request be extended by the Board of Commissioners if it is determined to the Board's reasonable satisfaction that there is a strong likelihood that the development and/or use will commence within the period of extension and proceed diligently thereafter to completion and the Board finds that there has not been a change in circumstances that would render the current zoning with Statement of Conditions incompatible with other zones and uses in the surrounding area or otherwise inconsistent with sound zoning policy.

H. REVERSION OF ZONING

If approved development and/or use of the rezoned land does not occur within the time frame specified under Subsection G above, then the land shall revert to its former zoning classification. The reversion process shall be initiated by the County requesting that the Planning Commission proceed with consideration of rezoning of the land to its former zoning classification. The procedure for considering and making this reversionary rezoning shall thereafter be the same as applies to all other rezoning requests.

I. SUBSEQUENT REZONING OF LAND

When land that is rezoned with a Statement of Conditions is thereafter rezoned to a different zoning classification or to the same zoning classification but with a different or no Statement of Conditions, whether as a result of a reversion of zoning pursuant to

Subsection H above or otherwise, the Statement of Conditions imposed under the former zoning classification shall cease to be in effect. Upon the owner's written request, the County Clerk shall record with the Register of Deeds a notice that the Statement of Conditions is no longer in effect.

J. AMENDMENT OF CONDITIONS

1. During the time period for commencement of an approved development or use specified pursuant to Subsection G above or during any extension thereof granted by the Board of Commissioners, the County shall not add to or alter the conditions in the Statement of Conditions.

2. The Statement of Conditions may be amended thereafter in the same manner as was prescribed for the original rezoning and Statement of Conditions.

K. COUNTY RIGHT TO REZONE

Nothing in the Statement of Conditions nor in the provisions of this Section shall be deemed to prohibit the County from rezoning all or any portion of land that is subject to a Statement of Conditions to another zoning classification. Any rezoning shall be conducted in compliance with this Ordinance and the Michigan Zoning Enabling Act.

L. FAILURE TO OFFER CONDITIONS

The County shall not require an owner to offer conditions as a requirement for rezoning. The lack of an offer of conditions shall not affect an owner's rights under this Ordinance.

SECTION 15.10 SEVERABILITY

In case any section or provision of this ordinance shall be held to be invalid by a court of competent jurisdiction, the same shall not affect any other provision of this ordinance, except so far as the provision declared to be invalid shall be inseparable from the remainder of any provision.

SECTION 15.11 EFFECTIVE DATE

This ordinance shall become effective on the date following approval by the Department of Commerce.

SECTION 15.12 REPEAL OF PRIOR ORDINANCE

The Isabella County Zoning Ordinance adopted June 23, 1980, as amended, is hereby repealed, effective coincident with the effective date of this ordinance.

SECTION 15.13 AUTHENTICATION

This zoning ordinance shall become effective on February 15, 1989. Duly adopted at a regular meeting of the Isabella County Board of Commissioners on December 20, 1988.

AUTHENTICATED BY:

Steve Rudoni, Chairperson

ATTESTED BY:

Betty Prout, County Clerk

RECOMMENDED BY:

Isabella County Planning Commission

Katharine Lindfors
Planning Commission Chairperson

EFFECTIVE DATE:
February 15, 1990

AMENDED:

October 19, 1989 (Ordinance 89-39)